Fan And Heater

2000
EDITION

Service Manual

PNEG-377

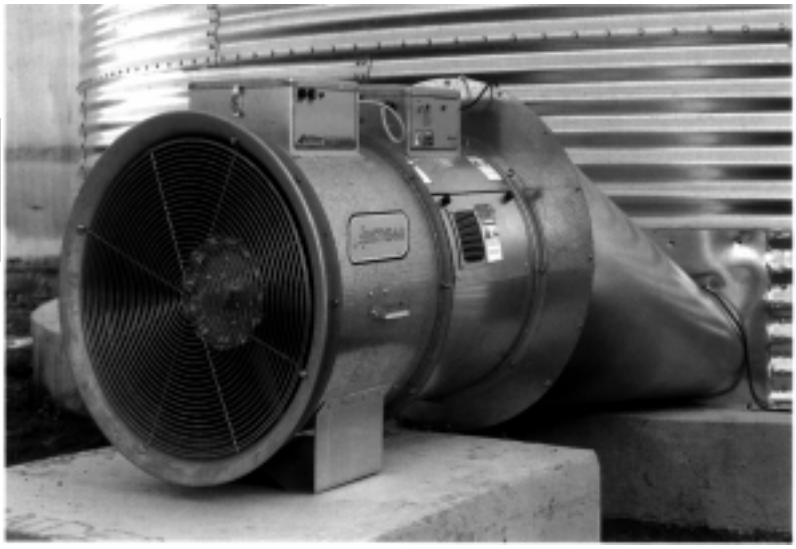

GSI

a division of

THE GSI GROUP

TABLE OF CONTENTS

Roof Warning, Operation & Safety 4
Safety Alert Decals 5
2000 Vane Axial Fans 8

2000 Centrifugal Fan Service Guide 17

2000 Gas Heater Service Guide 24
All Gas Heater Specifications 25
Series 2000 Heater 34
Deluxe Heater 52
Standard Heater 57

1996-1994 Gas Heaters 62

1993-1991 Gas Heaters 70

1990 Gas Heaters 73

Pre 1990 Gas Heaters 76

Miscellaneous Information 83
Motor Capacitor Chart 96

Roof Damage Warning and Disclaimer

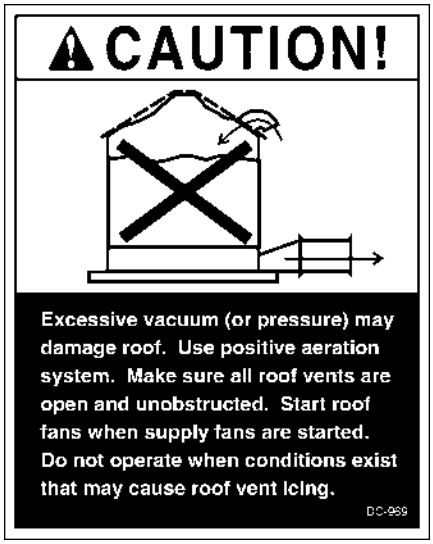

GSI DOES NOT WARRANT ANY ROOF DAMAGE CAUSED BY EXCESSIVE VACUUM OR INTERNAL PRESSURE FROM FANS OR OTHER AIR MOVING SYSTEMS. ADEQUATE VENTILATION AND/OR "MAKEUP AIR" DEVICES SHOULD BE PROVIDED FOR ALL POWERED AIR HANDLING SYSTEMS. GSI DOES NOT RECOMMEND THE USE OF DOWNWARD FLOW SYSTEMS (SUCTION). SEVERE ROOF DAMAGE CAN RESULT FROM ANY BLOCKAGE OF AIR PASSAGES. RUNNING FANS DURING HIGH HUMIDITY/COLD WEATHER CONDITIONS CAN CAUSE AIR EXHAUST OR INTAKE PORTS TO FREEZE.

Proper Use of Product

This product is intended for the use of grain drying only! Any other use is a misuse of this product. This product has sharp edges! These sharp edges may cause serious injury. To avoid injury handle sharp edges with caution and use proper protective clothing and equipment at all times. Guards are removed for illustration only. All guards must be in place before and during operation.

Safety Alert Symbol

The symbol shown is used to call your attention to instructions concerning your personal safety. Watch for this symbol; it points out important safety precautions. It means "ATTENTION", "WARNING", "CAUTION", and "DANGER". Read the message and be cautious to the possibility of personal injury or death.

WARNING! BE ALERT!
Personnel servicing fans and heaters should read this manual. Failure to read this manual and its safety instructions is a misuse of the equipment.

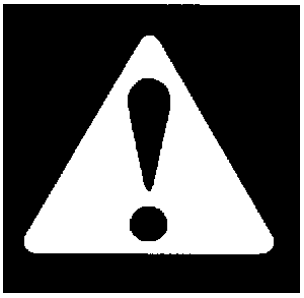

CAUTION! BE VERY CAREFUL WHEN CHECKING OUT 220V OR 460V CONTROL CIRCUIT. SERIOUS INJURY OR DEATH MAY OCCUR IF PROPER PRECAUTIONS ARE NOT TAKEN.

The GSI Group, Inc. recommends contacting your local power company, and having a representative survey your installation so the wiring is compatible with their system, and adequate power is supplied to your unit.

Safety decals should be read and understood by all people in the grain handling area.

If a decal is damaged or is missing contact:
GSI Group, Inc.
1004 E. Illinois St.
Assumption, IL 62510
217-226-4421
A free replacement will be sent to you.

BE SURE POWER IS DISCONNECTED AND LOCKED OUT BEFORE INSTALLATION. FAILURE TO DO SO MAY CAUSE SERIOUS INJURY OR DEATH

FAILURE TO INSTALL THERMOSTAT INCREASES RISK OF FIRE IN BIN! WARRANTIES ARE VOID ON HEATERS INSTALLED WITHOUT THERMOSTATS.

Fuel Warning

Important! Do not use propane tanks which have previously been used for ammonia unless they have been purged according to procedures of the National L. P. Association.
Be sure fuel supply system complies with all local codes for L. P. gas installations.
DO NOT USE FLAME FOR LEAK TESTING.

Power Warning

Be sure power is disconnected and locked out before installation!
Failure to do so may cause serious injury or death.
Important! Heater must be interlocked with fan for safe operation.
Important! Thermostat must be installed for safe operation.

2000 VANE AXIAL FANS

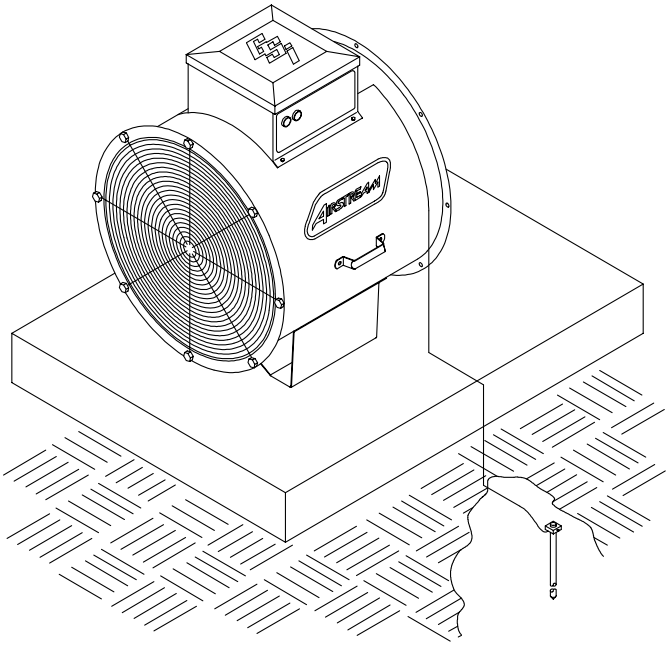

Figure 1: Use a #6 or approved size bare copper ground wire. Install a 5/8" diameter 8' long copper-clad ground rod, 2' away from the foundation and 1' below the surface of the ground or in accordance with local requirements.

Cross-sectional area of phase conductors supplying the equipment S (mm²)	Minimum cross-sectional area of the external protective conductor (mm²)
S<=16	S
16<=S<35	16
S=>35	S÷2

Previously Installed Units

It is recommended that previously installed units be checked to see that a machine to earth ground has been installed by an electrician.

Dig a hole large enough to hold 1 or 2 gallons of water. Work the ground rod into the earth until it is completely in the ground.

Machine to Earth Ground

It is very important that a machine to earth ground rod be installed at the fan. This is true even if there is a ground at the pole 15 feet away. This ground needs to be as close to the fan as possible, but no more than 8 feet away. The ground rod should be connected to the fan control panel with at least a #6 solid bare copper ground wire, or in accordance with local requirements. The machine to earth ground provides additional safety if there is a short. It also provides the grounding necessary for long life and operation of the solid state

Proper Installation of the Ground Rod

(Ground rods and wires are not supplied by GSI). It is recommended that the rod not be driven into dry ground. The following steps ensure proper ground rod installation:

1. Dig a hole large enough to hold 1 to 2 gallons of water.
2. Fill hole with water.
3. Insert rod through water and jab it into the ground.
4. Continue jabbing the rod up and down, the water will work its way down the hole, making it possible to work the rod completely into the ground. This method of installing the rod gives a good conductive bond with the surrounding soil.
5. Connect the bare copper ground wire to the rod with the proper ground rod clamp.
6. Connect the bare ground wire to the fan control boxes with a grounding lug. See Figure 3
7. Ground wire must not have any breaks or splices. Insulated wire is not recommended for grounding.

AIRSTREAM
AIRSTREAM
TEST STATION
TEST STATION

3450 RPM Vane Axial Fan

FAN HORSEPOWER	3/4				1				1.1/2				3			
RPM	3450				3450				3450				3450			
PHASE	1	3			1	3			1	3			1	3		
VOLTS	230	230	460	575	230	230	460	575	230	230	460	575	230	230	460	575
FULL LOAD AMPS	5.5	2.6	1.3	1.0	5.5	3.0	1.5	1.2	7.5	4.6	2.3	1.8	15	7.4	3.7	3
MINIMUM WIRE SIZE	Copper Wire				Copper Wire				Copper Wire				Copper Wire			
50' RUN	14	14	14	14	14	14	14	14	14	14	14	14	12	12	14	14
100' RUN	14	14	14	14	14	14	14	14	12	14	14	14	10	12	12	12
200' RUN	12	14	14	14	12	14	14	14	8	12	14	14	8	10	12	12
300' RUN	10	14	14	14	10	14	14	14	6	10	12	12	6	8	10	10
MINIMUM WIRE SIZE	Aluminum Wire				Aluminum Wire				Aluminum Wire				Aluminum Wire			
50' RUN	14	14	14	14	14	14	14	14	12	12	14	14	12	12	12	12
100' RUN	14	14	14	14	14	14	14	14	10	12	12	14	8	10	12	12
200' RUN	10	14	14	14	10	14	14	14	6	10	12	12	6	10	10	10
300' RUN	8	12	14	14	8	12	14	14	4	10	12	12	4	8	10	10
FUSE SIZE (SLOW BLOW)	15	10	5	5	15	10	5	5	15	10	5	5	30	15	10	10
BREAKER SIZE	20	15	10	10	20	15	10	10	20	15	10	10	40	20	15	15

FAN HORSEPOWER	7				10				15			
RPM	3450				3450				3450			
PHASE	1	3			1	3			1	3		
VOLTS	230	230	460	575	230	230	460	575	230	230	460	575
FULL LOAD AMPS	30	18	9	6.9	47	25	13	9.6	57	32	16	14
MINIMUM WIRE SIZE	Copper Wire				Copper Wire				Copper Wire			
50' RUN	10	10	12	12	8	8	12	12	6	6	10	10
100' RUN	8	10	12	12	6	6	10	12	4	4	10	10
200' RUN	4	8	10	12	4	4	10	10	2	2	10	10
300' RUN	4	6	8	10	2	2	8	8	0	0	8	10
MINIMUM WIRE SIZE	Aluminum Wire				Aluminum Wire				Aluminum Wire			
50' RUN	8	8	12	12	6	6	12	12	4	4	8	8
100' RUN	6	8	10	12	4	4	10	10	2	2	8	8
200' RUN	3	6	10	10	2	2	8	10	0	0	6	8
300' RUN	2	4	8	10	0	0	6	8	00	00	4	6
FUSE SIZE (SLOW BLOW)	40	25	15	15	60	30	20	15	75	40	20	20
BREAKER SIZE	60	30	15	15	80	40	20	20	100	60	30	20

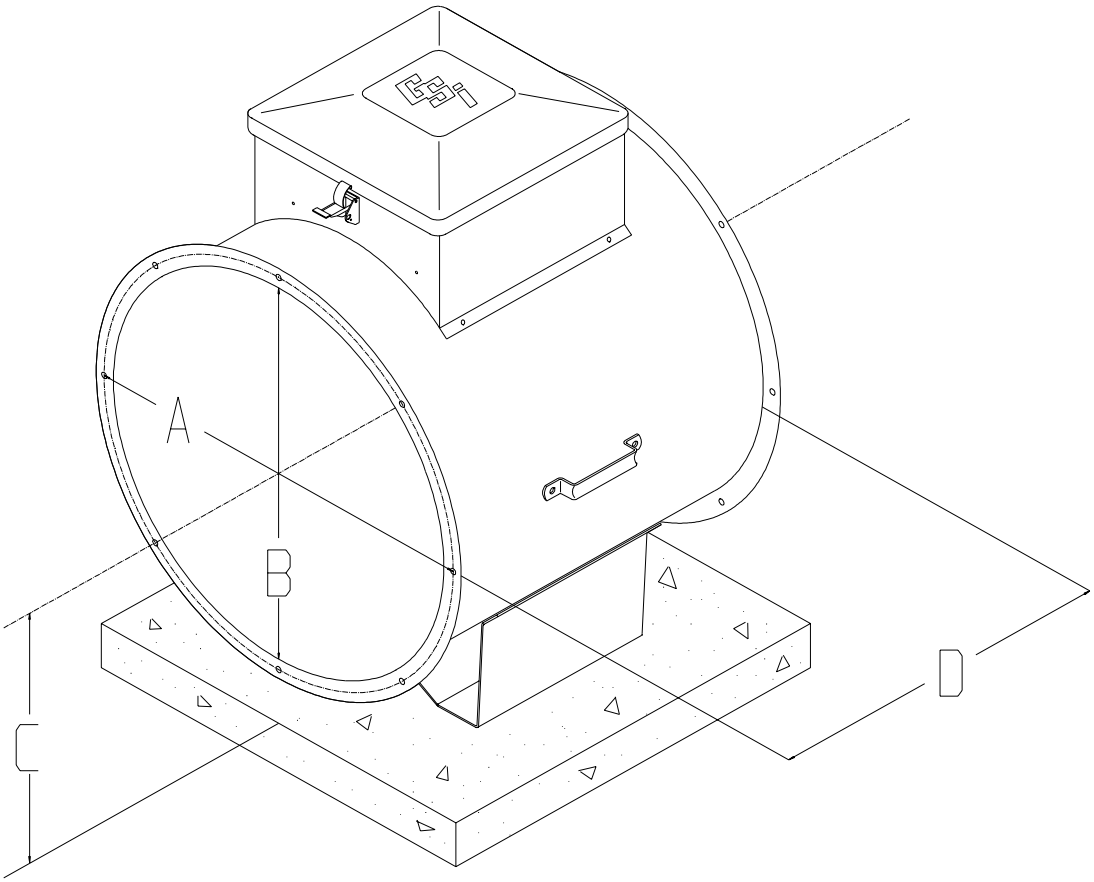

Figure 2: Fan dimensions

FAN	12" Dia	14" Dia	18" Dia	24" Dia	26" Dia	28" Dia
A (BOLT CIRCLE)	12.3/4	15.1/8	19.1/2	25.3/4	27.11/16	29.5/8
B (INSIDE DIA)	11.7/8	14.1/8	18.1/4	24.1/4	26.5/16	28.1/8
C (CL TO BOTTOM OF LEG)	8	10	13.5/16	15.3/8	16.7/8	18.1/8
D (LENGTH)	14.1/8	14.1/8	22	27.1/2	24.1/4	30

Note: All Dimensions in inches.

Fan Troubleshooting Chart

SYMPTOM	POSSIBLE CAUSE	SOLUTION
Fan will not run	Blown fuse or breaker in disconnect switch	Replace fuses or reset breakers
	Main power not turned on	Turn power on at all disconnects ahead of the unit
	Defective wiring or loose connection	Follow wiring diagram and tighten any loose connections
	Incorrect wire size	See wire size charts for proper sire size and change if needed
	Overload kicked out	Check manual reset, push in to reset
	Defective motor	Replace motor
	Defective magnetic contactor	Check the magnetic contactor
Fan runs for a short period of time then shuts off	Undersize wiring	Check to see that power supply wires are the proper size, contact your local power company.
	Low line voltage at the installation. Power failure.	Call power company after making sure wire size is correct
	Magnetic contactor malfunctioning.	Change magnetic contactor
	Defective start/stop button	Replace necessary part
	Wrong heater strip	Replace with proper heater strip
Fan makes ticking noise	Fan blade hitting fan housing	Stop fan and turn off electricity. Remove fan screen and check to see if fan blade is hitting the housing. Adjust motor position to obtain proper clearance.
	Motor bearing bad	Replace motor bearing
Fan vibrates	Fan not mounted securely to pad.	Mount fan securely
	Fan not level	Level fan
	Fan has dirt deposit on blade	Clean blade
	Motor shaft is bent	Replace motor
	Blade not mounted properly on shaft	Mount blade properly on shaft
	Blade out of balance	Replace or have blade rebalanced

Fan Control Circuit

CAUTION! BE VERY CAREFUL WHEN CHECKING OUT 220V OR 460V CONTROL CIRCUIT. SERIOUS INJURY OR DEATH MAY OCCUR IF PROPER PRECAUTIONS ARE NOT TAKEN.

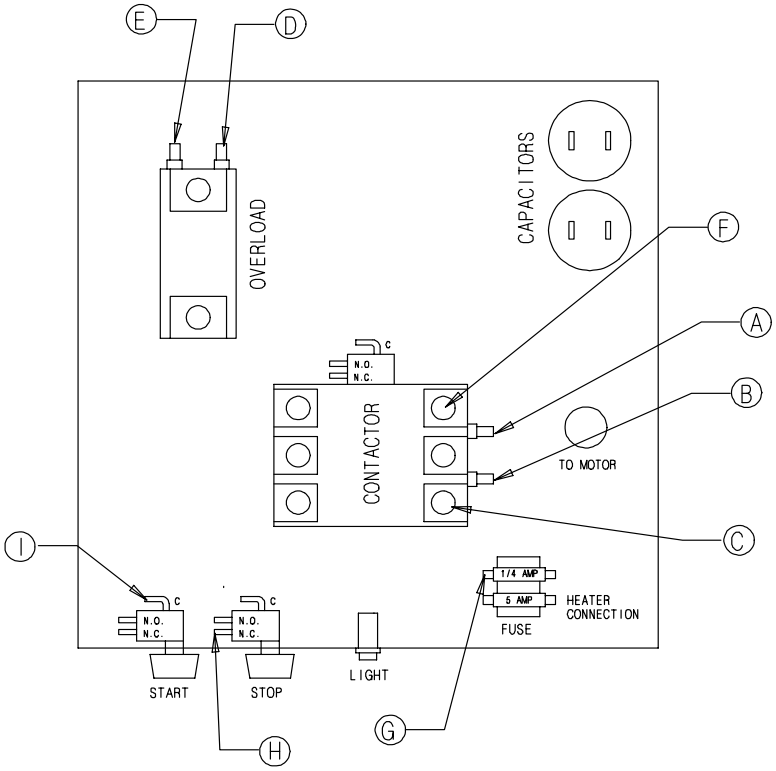

Figure 3: Fan circuit board.

IMPORTANT: ALL OF THE BELOW SYMPTOMS MAY BE CAUSED BY LOOSE WIRING OR CONNECTIONS. ALWAYS CHECK IT FIRST!

Push Start Button, Nothing Happens:

1. Check for 220V between points C and F. If no voltage present, check power at primary disconnect.

2. Check for 220V between points C and D. If no voltage present, check "J" (thermostat) wires. (on units with " J " wires)

3. Check for 220V between points C and E. If no voltage present, replace or reset thermal motor overload.

4. Check for 220V between points F and G. If no voltage present, replace 1/4 amp fuse.

5. Check for 220V between points F and H. If no voltage present, checkout stop switch and replace if necessary.

6. Check for 220V between points F and I (while pressing start button). If no voltage present checkout and replace start switch if necessary.

7. Check for 220V between points A and B (while pressing start button). If voltage present and no start, replace coil on contactor.

Push Start Button, Fan Starts but will not Continue after Start Switch is Released

1. Auxiliary switch on contactor is probably bad, checkout and replace if necessary.

Note: Always check for 220 volts at check points. 110 volts to ground does not necessarily mean check point is okay. Voltage may bleed through contactor coil and other similar parts.

240 Volt 1 Phase (15 HP)

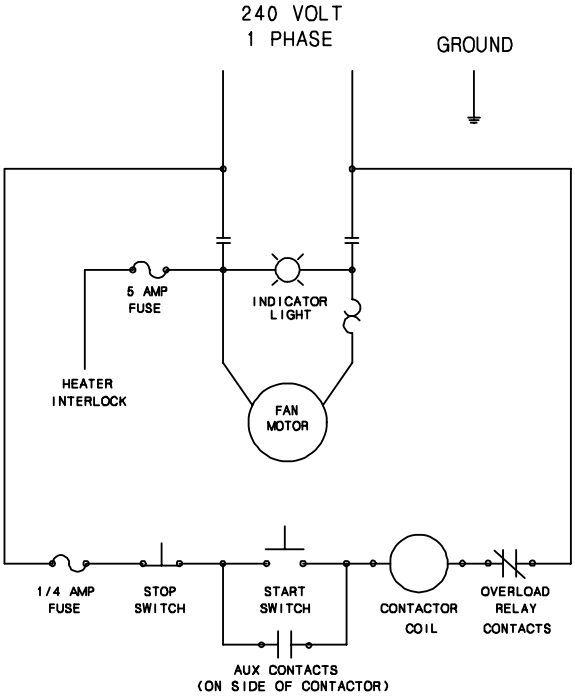

Schematic

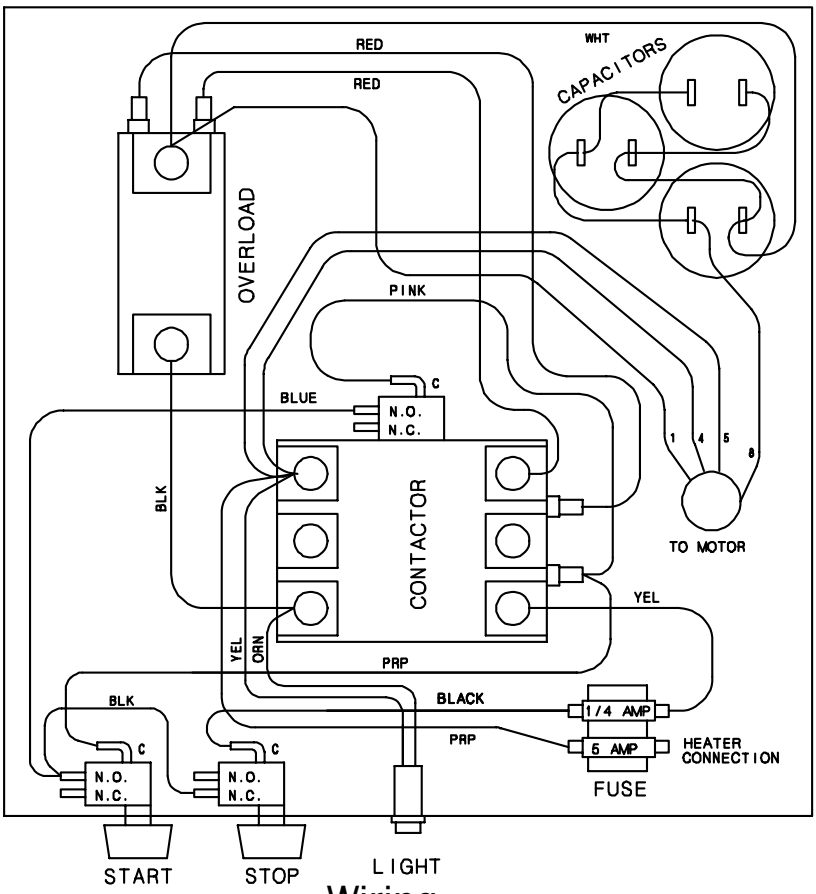

Wiring

Motors used in GSI fan units are all standard NEMA frame motors and are specially designed for use in crop drying applications. Most of the replacement parts for these motors are handled by authorized service stations of the various motor manufacturers.

1. Always disconnect and lock out power before working on or around fan motor and electrical components.

2. Malfunctioning electrical components should be checked by a qualified electrician.

3. For extra motor life, any electric motor should be run for 30 minutes, once a month. This will help eliminate any damaging moisture build-up in the motor and bearings.

4. If excess vibration shows up at some point when the fan has been running smoothly, check the blade for these conditions:

   a. Fans setting idle in the summer offer an excellent place for mud dobbers to build their nests. A mud dobber nest on the back of the fan blade will cause the fan to be out of balance and vibrate.

   b. Also, mice have been known to nest in the back of a blade. When the fan is started the centrifugal force kills the mice, but throws the blade out of balance.

Lubrication

This is a ball bearing motor. The bearings have been given initial lubrication at the factory. Motors without regreasing capability are factory lubricated for normal bearing life.

Hours of Service Per Year	Suggested Relube Interval NEMA FRAME SIZE		
	254 to 326T	42 to 215T	364 to 447T
5000 Hrs.	3 years	5 years	1 years
Continuous Normal Application	1 years	2 years	9 months
Seasonal Service Motor is idle for 6 months or more	1 year (beginning of season)	1 year (beginning of season)	1 year (beginning of season)
Continuous high ambients, dirty or moist locations, high vibration or where shaft end is hot (pumps-fans)	6 months	6 months	3 months

Relubrication Intervals (Motors with Regreasing Capability)

New motors having been in storage for over a year should be relubricated by the procedure noted in the chart to ensure long operating life.

Lubricant

Baldor motors are pre-greased normally with Shell Oil Company's "Dolium R". Several equivalent greases which are compatible with the Baldor furnished grease are Chevron Oil's "SRI No. 2" and Texaco Inc.'s "Premium RB".

Procedure

Overgreasing bearings can cause premature bearing failure. If motor is equipped with Alemite fitting, clean tip of fitting and apply grease gun. Use 1 to 2 full strokes on motors in NEMA 215 frame and smaller. Use 2 to 3 strokes on NEMA 254 thru NEMA 365 frame. Use 3 to 4 strokes on NEMA 404 frames and larger. On motors having drain plugs, remove grease drain plug and operate motor for 20 minutes before replacing drain plug.

On motors equipped with slotted head grease screw, 2 to 3 inch length of grease string into each hole on motors in NMEA 215 frame and smaller. Insert 3 to 5 inch length on larger motors. Motors having grease drain plugs, remove plug and operate motor for 20 minutes before replacing drain plug. **Keep grease clean. Lubricate motors at standstill. Remove and replace drain plugs at standstill. Do not mix petroleum grease and silicone grease in motor bearings.**

Hub Bolt Torque Requirement for Fan Blades

A. 14" 1HP.....50 ft. lbs. (Trantorque)
B. 18"-1.5HP.....63 ft. lbs. (Trantorque)
C. 24"-7HP through 28" 15HP.....84 ft. lbs. (Trantorque)
D. 24"-7HP through 28" 15HP.....16 ft. lbs. (Browning)

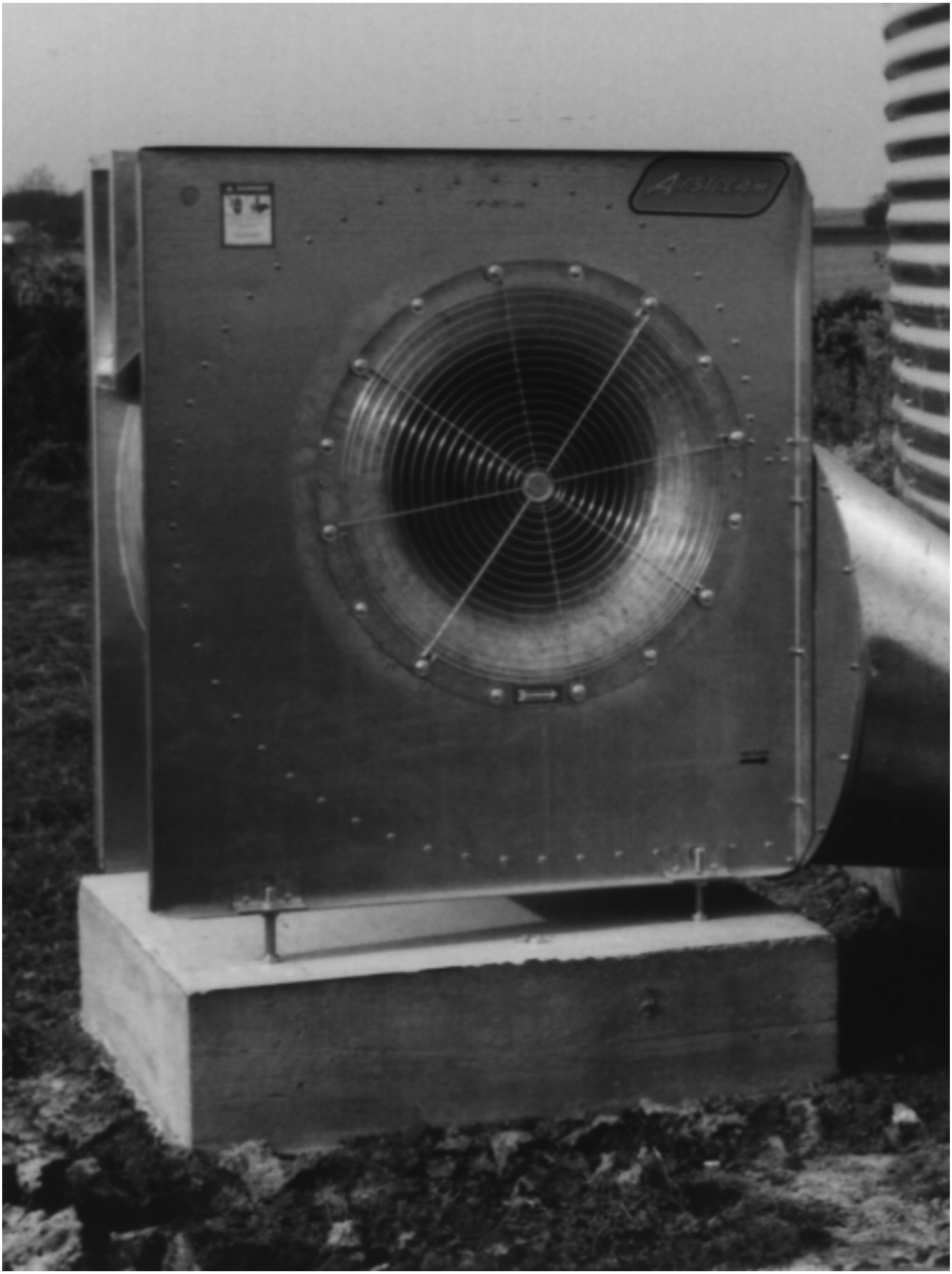

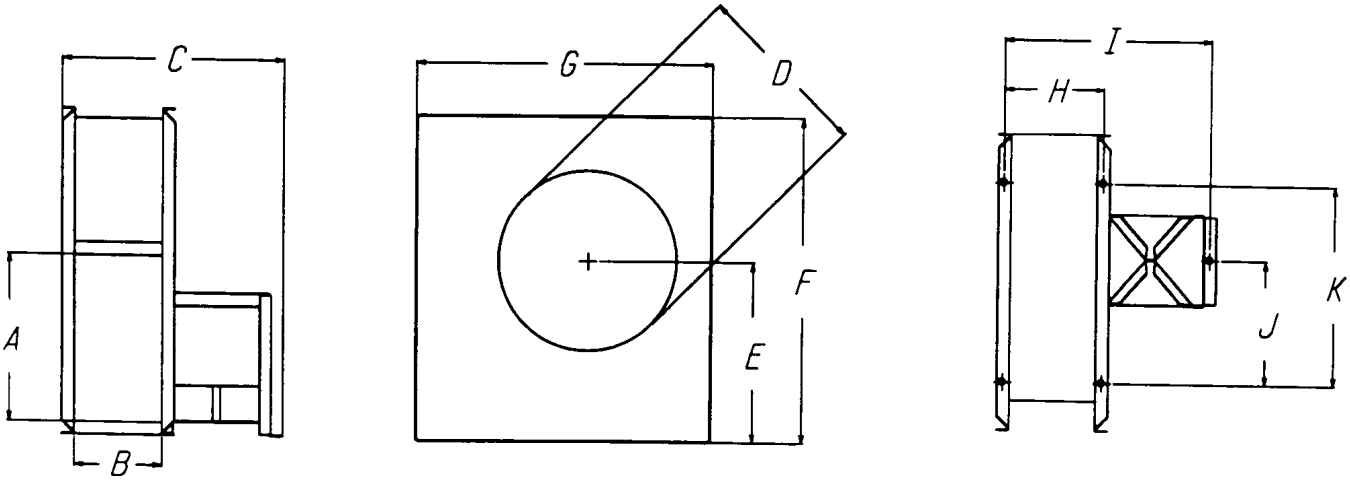

1750 RPM FAN

FAN	A	B	C	D	E	F	G	H	I	J	K
3HP	23.9/16	13.1/2	41.1/8	24.7/8	25.1/4	46.13/16	42.15/16	15.11/16	31.1/8	22.7/16	37.1/16
5HP	27.3/8	14.1/4	31.1/8	27.3/8	27.3/4	51.1/8	45.1/8	16.1/2	29.3/16	19.7/16	31.3/4
7.1/2HP	27.3/8	18	34.7/8	27.3/8	27.3/4	51.1/8	45.1/8	20.1/4	32.15/16	19.7/16	31.3/4
10HP	30.1/4	16.15/16	34.3/16	30	30.3/16	54.7/16	49.9/16	19.1/8	34.13/16	20.1/2	34.5/16
15HP	30.1/4	19.1/2	39.5/16	30	30.3/16	54.7/16	49.9/16	21.11/16	34.13/16	20.1/2	34.5/16
20HP	33.1/4	19.9/16	39.9/16	33.1/2	32.15/16	56.1/2	51.3/4	21.3/4	37.7/16	22.3/8	38.7/16
25HP	33.1/4	21.7/8	41.13/16	33.1/2	32.15/16	56.1/2	51.3/4	24.1/16	39.3/4	22.3/8	38.7/16
30HP	33.1/4	21.7/8	43.3/8	36.1/2	33.3/8	58.11/16	54.5/8	23.3/8	42.5/16	23.1/4	41.5/16
40HP	33.1/4	23.11/16	45.7/8	36.1/2	33.3/8	58.11/16	54.5/8	25.13/16	44.1/8	23.1/4	41.5/16
30-50HP double	33.1/4	44	92.1/16	33.1/2	32.15/16	56.1/2	51.3/4	46.1/4	89.9/16	21.1/16	38.7/16

3500 RPM FAN

FAN	A	B	C	D	E	F	G	H	I	J	K
3HP	16.1/2	8.1/8	26.15/16	16.1/2	17.3/8	34.13/16	32.3/4	10.3/8	24.15/16	13.15/16	22.1/8
5HP	16.1/2	10	28.13/16	16.1/2	17.3/8	34.13/16	32.3/4	12.3/16	26.13/16	13.15/16	22.1/8
7.1/2HP	19	10	29.9/16	20.1/2	20.11/16	39	37.3/16	12.3/16	27.9/16	12.11/16	20.11/16
10HP	19	11	30.9/16	20.1/2	20.11/16	39	37.3/16	13.3/16	28.9/16	12.11/16	20.11/16
15HP	19	13	32.9/16	20.1/2	20.11/16	39	37.3/16	15.3/16	30.9/16	12.11/16	20.11/16
20HP	23.9/16	12.9/16	40.3/16	24.7/8	25.1/4	46.13/16	42.15/16	14.3/4	38.3/16	18.7/16	29
30HP	23.9/16	14.1/16	41.11/16	24.7/8	25.1/4	46.13/16	42.15/16	16.1/4	39.11/16	18.7/16	29
40HP	23.9/16	16.1/2	44.1/16	24.7/8	25.1/4	46.13/16	42.15/16	18.11/16	42.1/8	18.7/16	29
50HP	27.3/8	15.3/4	45.1/16	27.3/8	27.3/4	51.1/8	45.1/8	17.15/16	43.1/8	20.1/4	32.11/16

Note: All Dimensions in inches.

1750 RPM FAN SPECIFICATIONS

FAN HORSEPOWER	3				5				7.1/2				10			
RPM	1750				1750				1750				1750			
PHASE	1	3			1	3			1	3			1	3		
VOLTS	230	230	460	575	230	230	460	575	230	230	460	575	230	230	460	575
FULL LOAD AMPS	15	12	6	3.6	25	14	7	5.5	35	22	11	7.9	40	28	14	10.2
MINIMUM WIRE SIZE	Copper Wire				Copper Wire				Copper Wire				Copper Wire			
50' RUN	10	12	14	14	8	10	12	12	8	10	12	12	6	6	10	10
100' RUN	8	12	12	12	6	10	12	12	6	10	12	12	6	6	10	10
200' RUN	6	8	10	10	4	8	12	12	4	8	12	12	4	4	8	8
300' RUN	4	6	8	8	2	6	10	10	2	6	10	10	2	3	6	6
MINIMUM WIRE SIZE	Aluminum Wire				Aluminum Wire				Aluminum Wire				Aluminum Wire			
50' RUN	8	10	12	12	6	8	10	10	6	8	10	10	4	4	8	8
100' RUN	6	10	10	10	4	8	10	10	4	8	10	10	4	4	8	8
200' RUN	4	6	8	8	2	6	10	10	2	6	10	10	2	2	6	6
300' RUN	2	4	6	6	0	4	8	8	0	4	8	8	0	2	4	4
FUSE SIZE (SLOW BLOW)	25	20	10	10	40	25	15	15	60	40	20	20	80	60	30	30
BREAKER SIZE	30	20	15	15	40	30	15	15	60	40	20	20	80	60	30	30

FAN HORSEPOWER	15				20			25			30			40			50		
RPM	1750				1750			1750			1750			1750			1750		
PHASE	1	3			3			3			3			3			3		
VOLTS	230	230	460	575	230	460	575	230	460	575	230	460	575	230	460	575	230	460	575
FULL LOAD AMPS	61	42	21	14	50	25	19.2	66	33	25	74	37	29	94	47	37	112	56	46
MINIMUM WIRE SIZE	Copper Wire				Copper Wire			Copper Wire			Copper Wire			Copper Wire			Copper Wire		
50' RUN	4	6	10	10	4	10	10	2	8	8	2	6	6	1	6	6	1	6	6
100' RUN	4	6	10	10	4	10	10	2	8	8	2	6	6	1	6	6	1	6	6
200' RUN	2	4	8	8	2	6	6	1	6	6	0	4	4	00	4	4	00	4	4
300' RUN	1	3	6	6	1	4	4	0	4	4	00	3	3	0000	2	2	0000	2	2
MINIMUM WIRE SIZE	Aluminum Wire				Aluminum Wire			Aluminum Wire			Aluminum Wire			Aluminum Wire			Aluminum Wire		
50' RUN	2	4	8	8	2	8	8	0	6	6	0	4	4	0	4	4	0	4	4
100' RUN	2	4	8	8	2	8	8	0	6	6	0	4	4	0	4	4	0	4	4
200' RUN	0	2	4	4	0	4	4	00	4	4	00	2	2	000	2	2	000	2	2
300' RUN	00	2	3	3	0	2	2	00	2	2	000	2	2	0000	0	0	0000	0	0
FUSE SIZE (SLOW BLOW)	80	60	30	30	80	40	40	100	60	60	150	80	80	200	100	100	200	100	100
BREAKER SIZE	100	60	30	30	80	40	40	100	60	60	150	80	80	200	100	100	200	100	100

3500 RPM FAN SPECIFICATIONS

FAN HORSEPOWER	3				5				7.1/2				10			
RPM	3450				3450				3450				3450			
PHASE	1	3			1	3			1	3			1	3		
VOLTS	230	230	460	575	230	230	460	575	230	230	460	575	230	230	460	575
FULL LOAD AMPS	14.5	7.8	3.9	3	19.5	12	6	4.8	33	18.8	9.4	7.2	40	24	12	9.6
MINIMUM WIRE SIZE	Copper Wire				Copper Wire				Copper Wire				Copper Wire			
50' RUN	10	12	14	14	10	12	14	14	8	10	14	14	6	6	10	10
100' RUN	8	12	12	12	8	12	12	12	8	10	12	12	6	6	10	10
200' RUN	6	8	10	10	6	8	10	10	6	8	10	10	4	4	8	8
300' RUN	4	6	8	8	4	6	8	8	3	6	8	8	2	3	6	6
MINIMUM WIRE SIZE	Aluminum Wire				Aluminum Wire				Aluminum Wire				Aluminum Wire			
50' RUN	8	10	12	12	8	10	12	12	6	8	12	12	4	4	8	8
100' RUN	6	10	10	10	6	10	10	10	6	8	10	10	4	4	8	8
200' RUN	4	6	8	8	4	6	8	8	4	6	8	8	2	2	6	6
300' RUN	2	4	6	6	2	4	6	6	2	4	6	6	0	2	4	4
FUSE SIZE (SLOW BLOW)	25	20	10	10	40	25	15	15	60	40	20	20	80	60	30	30
BREAKER SIZE	30	20	15	15	40	30	15	15	60	40	20	20	80	60	30	30

FAN HORSEPOWER	15			20			30			40			50		
RPM	3450			3450			3450			3450			3450		
PHASE	3			3			3			3			3		
VOLTS	230	460	575	230	460	575	230	460	575	230	460	575	230	460	575
FULL LOAD AMPS	42	21	14	46	23	19	92	46	38	112	56	46	112	56	46
MINIMUM WIRE SIZE	Copper Wire			Copper Wire			Copper Wire			Copper Wire			Copper Wire		
50' RUN	6	10	10	6	10	10	2	6	6	1	6	6	1	6	6
100' RUN	6	10	10	6	10	10	2	6	6	1	6	6	1	6	6
200' RUN	4	8	8	4	6	6	0	4	4	00	4	4	00	4	4
300' RUN	3	6	6	3	4	4	00	3	3	0000	2	2	0000	2	2
MINIMUM WIRE SIZE	Aluminum Wire			Aluminum Wire			Aluminum Wire			Aluminum Wire			Aluminum Wire		
50' RUN	4	8	8	4	8	8	0	4	4	0	4	4	0	4	4
100' RUN	4	8	8	4	8	8	0	4	4	0	4	4	0	4	4
200' RUN	2	4	4	2	4	4	00	2	2	000	2	2	000	2	2
300' RUN	2	3	3	2	2	2	000	2	2	0000	0	0	0000	0	0
FUSE SIZE (SLOW BLOW)	60	30	30	80	40	40	150	80	80	200	100	100	200	100	100
BREAKER SIZE	60	30	30	80	40	40	150	80	80	200	100	100	200	100	100

240 Volt 1 Phase (15 HP Marathon)

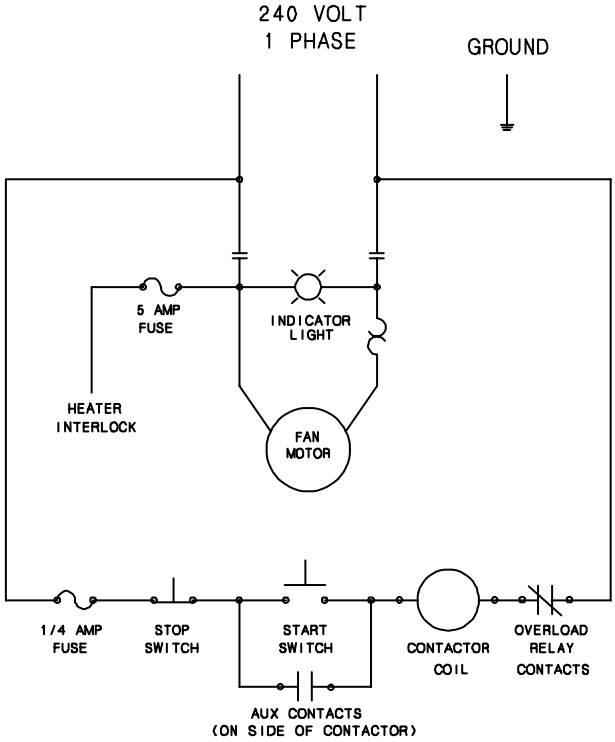

Schematic

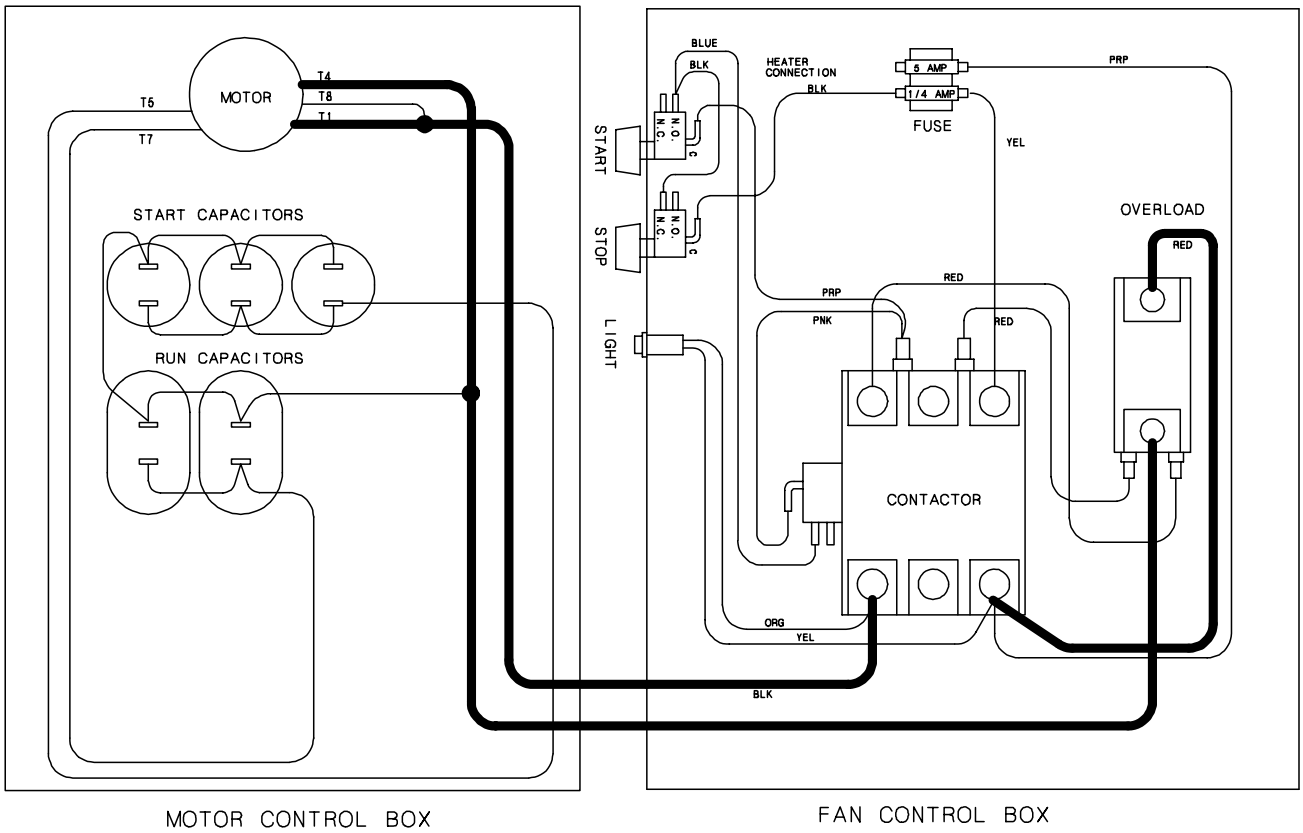

Wiring Diagram

Motors used in GSI fan units are all standard NEMA frame motors and are specially designed for use in crop drying applications. Most of the replacement parts for these motors are handled by authorized service stations of the various motor manufacturers.

1. Always disconnect and lock out power before working on or around fan motor and electrical components.

2. Malfunctioning electrical components should be checked by a qualified electrician.

3. For extra motor life, any electric motor should be run for 30 minutes, once a month. This will help eliminate any damaging moisture build-up in the motor and bearings.

4. If excess vibration shows up at some point when the fan has been running smoothly, check the blade for these conditions:

   a. Fans setting idle in the summer offer an excellent place for mud dobbers to build their nests. A mud dobber nest on the back of the fan blade will cause the fan to be out of balance and vibrate.

   b. Also, mice have been known to nest in the back of a blade. When the fan is started the centrifugal force kills the mice, but throws the blade out of balance.

Lubrication

This is a ball bearing motor. The bearings have been given initial lubrication at the factory. Motors without regreasing capability are factory lubricated for normal bearing life.

Hours of Service Per Year	Suggested Relube Interval		
	NEMAFRAME SIZE		
	42 to 215T	254 to 326T	364 to 447T
5000 Hrs.	5 years	3 years	1 years
Continuous Normal Application	2 years	1 years	9 months
Seasonal Service Motor is idle for 6 months or more	1 year (beginning of season)	1 year (beginning of season)	1 year (beginning of season)
Continuous high ambients, dirty or moist locations, high vibration or where shaft end is hot (pumps-fans)	6 months	6 months	3 months

Relubrication Intervals
(Motors with Regreasing Capability)

New motors having been in storage for over a year should be relubricated by the procedure noted in the chart to ensure long operating life.

Lubricant

Baldor motors are pre-greased normally with Shell Oil Company's "Dolium R". Several equivalent greases which are compatible with the Baldor furnished grease are Chevron Oil's "SRI No. 2" and Texaco Inc.'s "Premium RB".

Procedure

Overgreasing bearings can cause premature bearing failure. If motor is equipped with Alemite fitting, clean tip of fitting and apply grease gun. Use 1 to 2 full strokes on motors in NEMA 215 frame and smaller. Use 2 to 3 strokes on NEMA 254 thru NEMA 365 frame. Use 3 to 4 strokes on NEMA 404 frames and larger. On motors having drain plugs, remove grease drain plug and operate motor for 20 minutes before replacing drain plug.

On motors equipped with slotted head grease screw, remove screw and apply grease tube to hole. Insert 2 to 3 inch length of grease string into each hole on motors in NMEA 215 frame and smaller. Insert 3 to 5 inch length on larger motors. Motors having grease drain plugs, remove plug and operate motor for 20 minutes before replacing drain plug. **Keep grease clean. Lubricate motors at standstill. Remove and replace drain plugs at standstill. Do not mix petroleum grease and silicone grease in motor bearings.**

Hub Bolt Torque Requirement for Fan Blades

A. 3-15HP 3500RPM fans.....16ft. lbs. (Browning)
B. 20-50HP 3500RPM fans.....29ft. lbs. (Browning)
C. 3-50HP 1750RPM fans.....29ft. lbs. (Browning)
D. 3-7.5HP 1750RPM fans.....125ft. lbs. (Trantorque)
E. 10-20HP 1750RPM fans.....160ft. lbs. (Trantorque)
F. 30-50HP 1750RPM fans.....200ft. lbs. (Trantorque)

2000 Gas Heater Service Guide

Bin Configuration

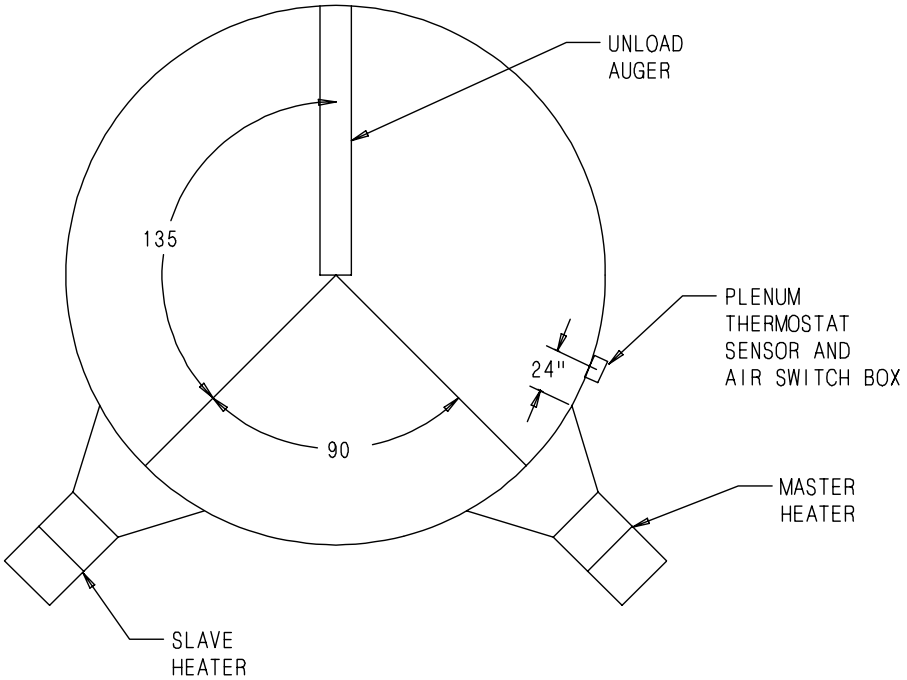

IMPORTANT! When mounting (2) heaters on a bin it is imperative that they be situated as illustrated in this drawing. Plenum thermostat must be to the right of master heater and master heater must be to the right of slave heater.

THIS TABLE IS NOT INTENDED AS A DRYING GUIDE.
IT SHOULD BE USED AS A REFERENCE FOR SETTING MAXIMUM PLENUM TEMPERATURE FOR SAFE OPERATION.

Operating Temperature Table

	LO-TEMP BATCH	HIGH-TEMP BATCH DRY NO STIRRING	HIGH-TEMP WITH STIRRING	CONTINUOUS FLOW (RECIRCULATING)
CORN	5-20^0 ABOVE AMBIENT TEMP	120^0	140^0	160^0
RICE	5-10^0 ABOVE AMBIENT TEMP	100^0	100^0	NOT RECOMMENDED
BEANS & WHEAT	5-20^0 ABOVE AMBIENT TEMP	110^0	120^0	NOT RECOMMENDED

IMPORTANT!
DO NOT EXCEED PLENUM TEMPERATURES LISTED IN TABLE

DISCONNECT AND LOCK-OUT POWER BEFORE SERVICING HEATER

1. Un-snap terminal strip tops from HF-7100 circuit board.
2. Remove HF-7100 board from Snap-track Mounting.
3. Remove HF-7034 Flame probe module (if you do not have this module you will have to install a new flame sensor (THH-4179) in unit as well) from control box. Cut green and red wires from sensor long enough to install onto HF-7318 board.
4. Install HF-7318 into Snap-track.
5. Snap terminal strip tops back onto new circuit board.
6. Remove Reset switch from front panel of control Box and unwire leads from terminal strip.
7. Drill out hole that reset was removed from to 1/2" diameter.
8. Install Red neon light (TFH-2021) in 1/2" hole. This is the flame-out light. Wire to terminals 11 and 5 as shown in diagram.
9. Jump terminals 17 and 18 as shown on diagram.
10. Install red and green wires onto terminals 3 and 4 as shown on diagram.
    Note: terminal 3 must go to the flame sensor (not ground)

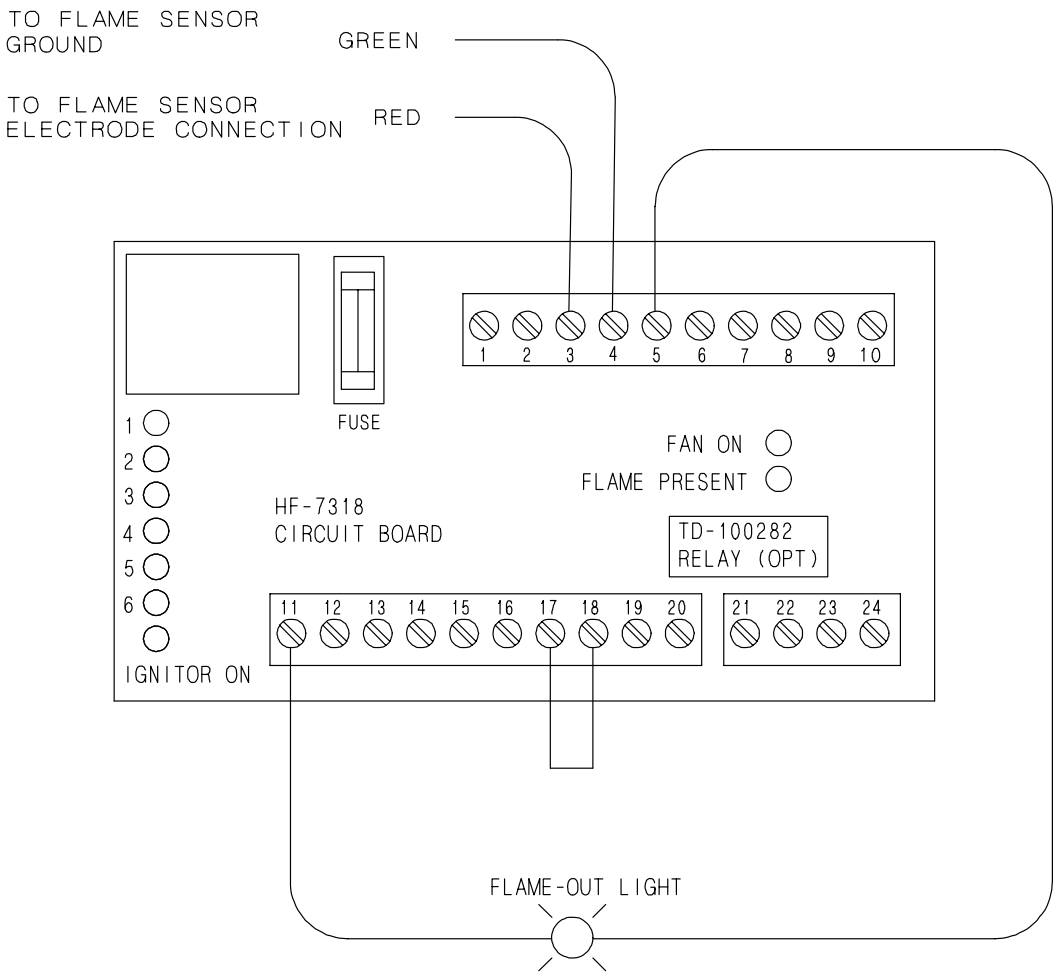

High Temperature Heater Specifications

		18"	24"	26"	28"
All models	Inside diameter	18.5/16"	24.1/4"	26.5/16"	28.1/8"
	Bolt circle diameter	19.7/16"	25.3/4"	27.15/16"	29.5/8"
	Length	22"	22.1/2"	22.1/4"	25.1/4"
	BTU rating	1400000	2100000	2700000	3000000
	Weight	81	110	115	140
Liquid models	Maximum fuel flow (GPH)	N/A	23	30	34
	Orifice	N/A	3/16"	7/32"	15/64"
	Minimum operating pressure	N/A	2	2	2
	Maximum operating pressure	N/A	20	20	20
	Minimum line size	N/A	3/8"	3/8"	3/8"
Vapor models	Maximum fuel flow (CFH)	585	877	1128	1253
	Orifice	5/32"	3/16"	7/32"	15/64"
	Minimum operating pressure	2	2	2	2
	Maximum operating pressure	20	20	20	20
	Minimum line size	1/2"	3/4"	3/4"	3/4"
Natural gas models	Maximum fuel flow (CFH)	1473	2210	2842	3157
	Orifice	1/4"	5/16"	23/64"	3/8"
	Minimum operating pressure	1	1	1	1
	Maximum operating pressure	7	7	7	7
	Minimum line size	3/4"	1"	1.1/4"	1.1/4"

Low Temperature Heater Specifications

		18"	24"	26"	28"
All models	Inside diameter	18.5/16"	24.1/4"	26.5/16"	28.1/8"
	Bolt circle diameter	19.7/16"	25.3/4"	27.15/16"	29.5/8"
	Length	22"	22.1/2"	22.1/4"	25.1/4"
	BTU rating	400000	500000	500000	500000
	Weight	81	110	115	140
Vapor models	Maximum fuel flow (GPH)	167	292	292	292
	Orifice	5/64"	3/32"	3/32"	3/32"
	Minimum operating pressure	2	2	2	2
	Maximum operating pressure	20	20	20	20
	Minimum line size	3/8"	3/8"	3/8"	3/8"
Natural gas models	Maximum fuel flow (CFH)	421	736	736	736
	Orifice	9/64"	5/32"	5/32"	5/32"
	Minimum operating pressure	1	1	1	1
	Maximum operating pressure	7	7	7	7
	Minimum line size	1/2"	1/2"	1/2"	1/2"

BTU's per Gauge Pressure (PSI) Propane Models (Approximate)

High Temperature

Diameter	Operating Pressure (PSI)									
	2	4	6	8	10	12	14	16	18	20
18"	416380	588680	720290	832760	930880	1019420	1107800	1174960	1244360	1340080
24"	598250	844730	1036170	1198890	1340080	1464520	1581770	1689460	1787570	1892860
26"	816010	1148640	1409480	1632030	1825860	1995762	2153700	2302070	2436070	2577260
28"	935660	1318540	1617670	1868930	2091480	2309250	2467180	2649050	2792630	2955360

Low Temperature

Diameter	Operating Pressure (PSI)									
	2	4	6	8	10	12	14	16	18	20
18"	102900	145970	181870	208190	234510	253660	275200	294340	311090	335020
24-28"	148370	210580	258440	299130	335020	366130	394850	421170	447490	473810

Gauge Pressure (Psi) Required To Maintain Temperature (Approximate)
(HIGH TEMP UNITS ONLY)

Fan Model	Static Pressure	Heat Rise Degrees F						
		60	80	100	120	140	160	180
3HP-18"	1"	2	3	4	5	6	8	9
	2"	1	1	2	3	4	5	6
	3"	low-temp	low-temp	1	2	2	3	3
7HP-24"	1"	2	4	6	8	10	14	17
	2"	1	3	4	5	7	9	11
	3"	low-temp	low-temp	1	2	3	3	4
	4"	low-temp	low-temp	low-temp	low-temp	1	2	3
10HP-24"	1"	4	6	9	13	18	22	26
	2"	3	5	8	10	14	18	22
	3"	2	3	4	6	8	9	11
	4"	1	2	3	4	5	6	8
15HP-26"	1"	2	4	6	8	11	14	18
	2"	2	4	5	7	9	13	16
	3"	1	3	4	5	7	10	13
	4"	1	3	4	5	7	9	11
	5"	low-temp	1	2	3	3	4	5
15HP-28"	1"	3	4	7	9	12	16	20
	2"	2	4	6	8	11	14	18
	3"	2	3	4	5	8	10	13
	4"	1	2	3	4	6	8	10
	5"	low-temp	1	2	3	3	4	5

BTU's Gauge Pressure (PSI) Natural Gas Models (Approximate)

High Temperature

Diameter	Operating Pressure (PSI)						
	1	2	3	4	5	6	7
18"	454180	644780	787970	909260	1016880	1115380	1204750
24"	710450	1006850	1231200	1419980	1587790	1741920	1881456
26"	938450	1331520	1627920	1876896	2099420	2302800	2487940
28"	1022350	1450080	1772020	2043790	2285470	2507090	2708640

Low Temperature

Diameter	Operating Pressure (PSI)						
	1	2	3	4	5	6	7
18"	144100	205200	250800	289100	322850	353860	383040
24-28"	177840	251710	308260	355680	397632	435936	470590

Gauge Pressure (Psi) Required To Maintain Temperature (Approximate)
(High Temp Units Only)

Fan Model	Static Pressure	Heat Rise Degrees F						
		60	80	100	120	140	160	180
3HP-18"	1"	1	1	2	2	3	3	4
	2"	1	1	1	1	2	2	3
	3"	low-temp	low-temp	1	1	1	1	1
7HP-24"	1"	1	2	2	3	4	5	6
	2"	1	1	1	2	2	3	4
	3"	low-temp	low-temp	1	1	1	1	2
	4"	low-temp	low-temp	low-temp	1	1	1	1
10HP-24"	1"	2	2	4	5	6	7	8
	2"	1	2	3	3	4	6	7
	3"	1	1	1	2	2	3	4
	4"	low-temp	1	1	1	1	2	2
15HP-26"	1"	1	2	2	3	4	5	7
	2"	1	1	2	3	3	4	5
	3"	1	1	2	2	3	3	4
	4"	1	1	1	1	2	2	3
	5"	low-temp	low-temp	1	1	1	1	2
15HP-28"	1"	1	2	3	4	5	7	8
	2"	1	2	2	3	4	5	6
	3"	1	1	2	2	3	4	5
	4"	1	1	1	1	2	2	3
	5"	low-temp	low-temp	1	1	1	2	2

Low & Medium Temperature Models

Fuel Type	Description	Lo-Temp	Med-Temp
Vapor Models	Maximum fuel flow (CFH)	167	475
	Orifice	.094	.156
	Minimum operating pressure	1	1
	Maximum operating pressure	15	15
	Minimum line size	1/2"	1/2"
Natural Gas Models	Maximum fuel flow (CFH)	400	1100
	Orifice	.141	.219
	Minimum operating pressure	1	1
	Minimum operating pressure	8	8
	Minimum line size	1/2"	3/4"
Common measurements	Inside diameter	25-7/8"	25-7/8"
	Bolt circle diameter	27-3/16"	27-3/16"
	length	13-1/2"	13-1/2"
	BTU rating	400,000	1,100,000
	Weight	73	73

BTU's Per Gauge Pressure (PSI) Propane Models (Approximate)

HIGH TEMPERATURE

Diameter	Operating Pressure (PSI)							
	1	3	5	7	9	11	13	15
18"	294,340	509,710	658,080	777,730	880,620	981,130	1,060,099	1,136,675

Gauge Pressure (PSI) Required to Maintain Temperature (Aproximate)

Fan Model	Static Pressure	Heat Rise Degrees F						
		20	30	40	50	60	70	80
10HP	2"	1	2	3	5	7	9	11
	3"	1	2	3	4	6	8	10
	4"	1	2	3	4	5	7	9
	5"	1	2	3	3	5	6	8
15HP	2"	2	3	5	7	10	14	
	3"	1	2	4	7	9	13	15
	4"	1	2	4	6	8	11	14
	5"	1	2	3	5	7	9	11
20HP	3"	2	4	7	10	15		
	4"	2	3	6	9	13		
	5"	2	3	6	8	12	15	
	6"	2	4	6	8	11	14	18
25HP	3"	2	4	5	7	9	13	16
	4"	1	3	4	5	7	10	13
	5"	1	3	4	5	7	9	11
	6"	low-temp	1	2	3	3	4	5
30HP	3"	3	4	7	9	12	16	20
	4"	2	4	6	8	11	14	18
	5"	2	3	4	5	8	10	13
	6"	1	2	3	4	6	8	10
40HP	3"	3	4	7	9	12	16	20
	4"	2	4	6	8	11	14	18
	5"	2	3	4	5	8	10	13
	6"	1	2	3	4	6	8	10
	5"	low-temp	1	2	3	3	4	5

Btu's Per Gauge Pressure (Psi) Natural Gas Models (Approximate)

MED TEMPERATURE

Diameter	Operating Pressure (PSI)							
	1	2	3	4	5	6	7	8
26"	382,000	541,000	662,000	763,000	854,000	936,000	1,011,000	1,083,000

LOW TEMPERATURE

Diameter	Operating Pressure (PSI)							
	1	2	3	4	5	6	7	8
26"	158,000	225,000	275,000	317,000	354,000	388,000	420,000	449,000

Gauge Pressure (Psi) Required To Maintain Temperature (Approximate)

Fan Model	Static Pressure	Heat Rise Degrees F						
		20	30	40	50	60	70	80
10HP	2"	1	1	2	3	4	5	7
	3"	1	1	2	3	4	5	6
	4"	1	1	2	2	3	4	6
	5"	1	1	2	2	3	4	5
15HP	2"	1	2	3	4	6	8	
	3"	1	2	3	4	6	7	
	4"	1	2	2	4	5	7	8
	5"	1	1	2	3	4	5	7
20HP	3"	1	2	4	6	8		
	4"	1	2	4	5	8		
	5"	1	2	3	5	7		
	6"	1	2	3	5	7	8	
25HP	3"	2	3	6	8			
	4"	2	3	5	8			
	5"	2	3	5	7			
	6"	1	3	4	7			
30HP	4"	2	4	7				
	6"	2	3	5	8			
	8"	2	3	5	7			
	10"	1	2	3	5	7		
40HP	4"	3	6	8				
	6"	2	5	8				
	8"	2	4	7				
	10"	2	3	5	7			

Centrifugal Heater Specifications

		Hi-Temp Model	Lo-Temp Model
All models	BTU rating Weight	4000000 145	500000 135
Liquid models	Maximum fuel flow (GPH) Orifice size Minimum operating pressure Maximum operating pressure Minimum line size	43 .25 3 30 3/8"	N/A N/A N/A N/A N/A
Vapor models	Maximum fuel flow (CFH) Orifice size Minimum operating pressure Maximum operating pressure Minimum line size	1590 .25 2 30 1"	210 .109 1 15 1/2"
Natural gas models	Maximum fuel flow (CFH) Orifice size Minimum operating pressure Maximum operating pressure Minimum line size	4200 .375 1 15 1.1/4"	500 .156 1 7 1"

Heater Dimensional Specifications

Heater Size	10-15	20-30	40
Inside Height	30.1/4"	33.1/4"	33.1/4"
Inside Width	19.1/2"	21.3/4"	23.11/16"
Inside length	24"	24"	24"

Air Pressure Switch and Temperature Sensor Box Installation

1. Using air switch box as a guide, mark 2 holes on plenum side wall appproximately 24" to right of transition centered up and down in plenum.

2. Drill air switch filter hole 5/8" diameter for snug fit. Drill temperature sensor hole 5/8" or larger to accommodate mounting nut.

3. Mount Box to Bin using (4) self drilling screws

4. Caulk between housing and sidewall to seal.

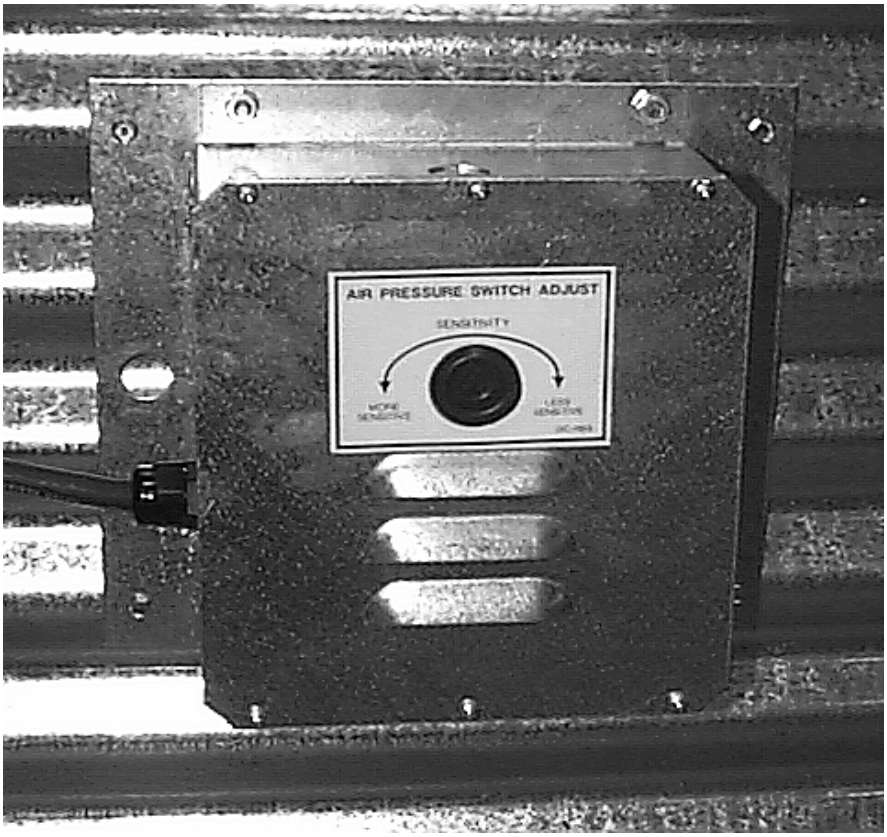

Air Switch Box Assembly

Transition Hi-limit Installation

1. Mark location on transition one (1) foot up from the bottom (entrance collar) and centered in the transition.

2. Drill or knock out 7/8" diameter hole on marked location.

3. Install transition hi-limit using supplied self drilling screws.

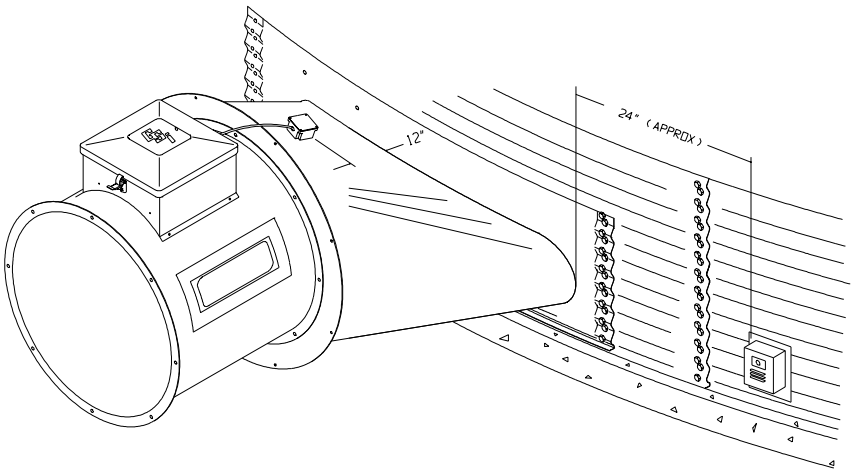

Figure 1: The transition connecting the Series 2000 Heater to the bin with the plenum sensor in place.

Heater Unit

1. Be sure fan unit is installed and wired to meet local codes. Be sure equipment is well grounded (see page 10).

2. A separate neutral is required for 120 volt heater circuit in 220 volt 1PH and 3PH fan units. For 460 volt fan units a separate 120 volt power supply or transformer is required.

3. Run 5-wire black cord from heater unit to fan unit and secure to fan.

4. Orange and red wires should be connected in series with coil in fan. When contacts in heater between these wires open fan shuts down. Recommended wiring is shown in Figure 2.

5. Black and white wires should be connected to a fused 120V power supply as shown. Green wire should be connected to ground in fan. Heater should have power, even with fan off.

Wiring

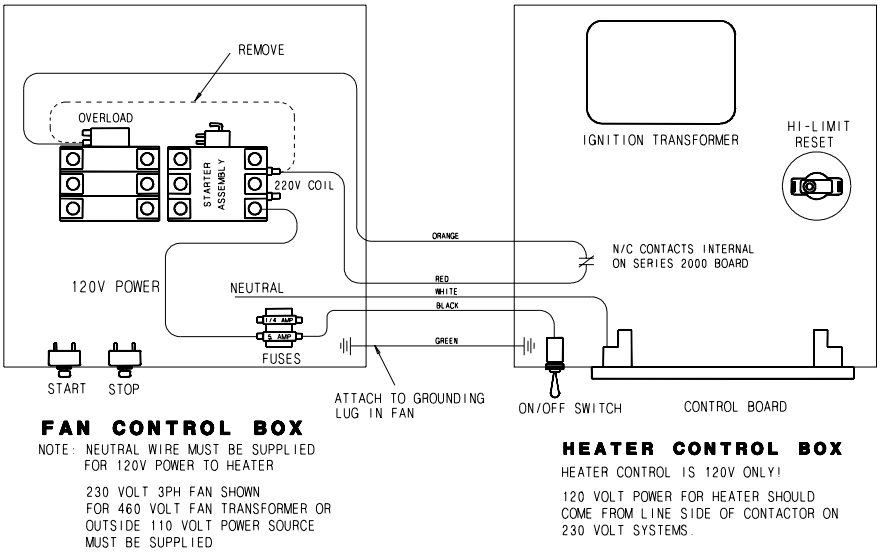

Figure 2: Wiring diagram for the fan and heater unit.

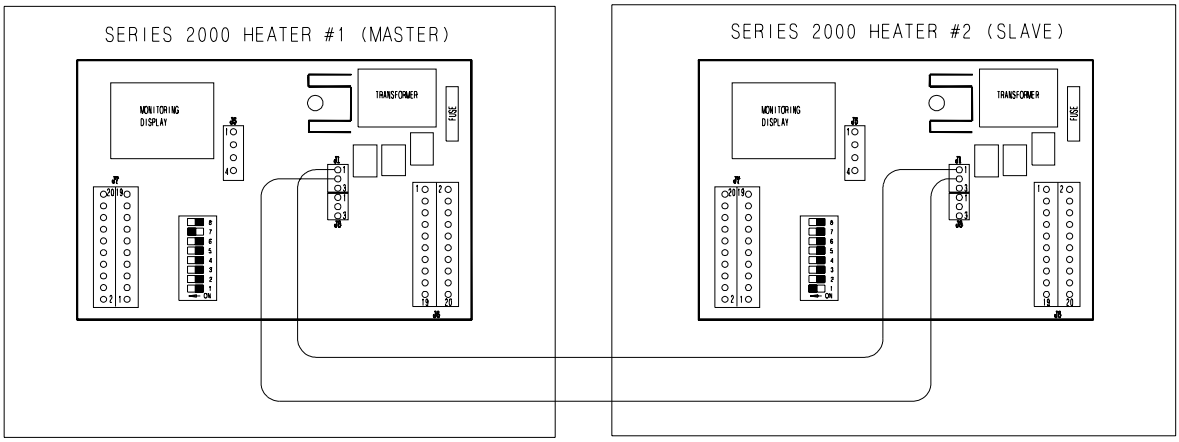

Figure 3: Secondary heater wiring diagram.

SECONDARY HEATER UNIT

1. Secondary heater unit runs as a slave of heater unit #1 and requires no plenum temperature sensor.

2. Run (2) 20 gauge (minimum) wires from secondary heater unit (slave) to heater unit #1 (master).

3. Connect wires as shown in Figure 3.

4. Third heater unit may also be added to system. If adding third unit, run connections to master unit #1 and connect them in parallel with sec ondary heater unit.

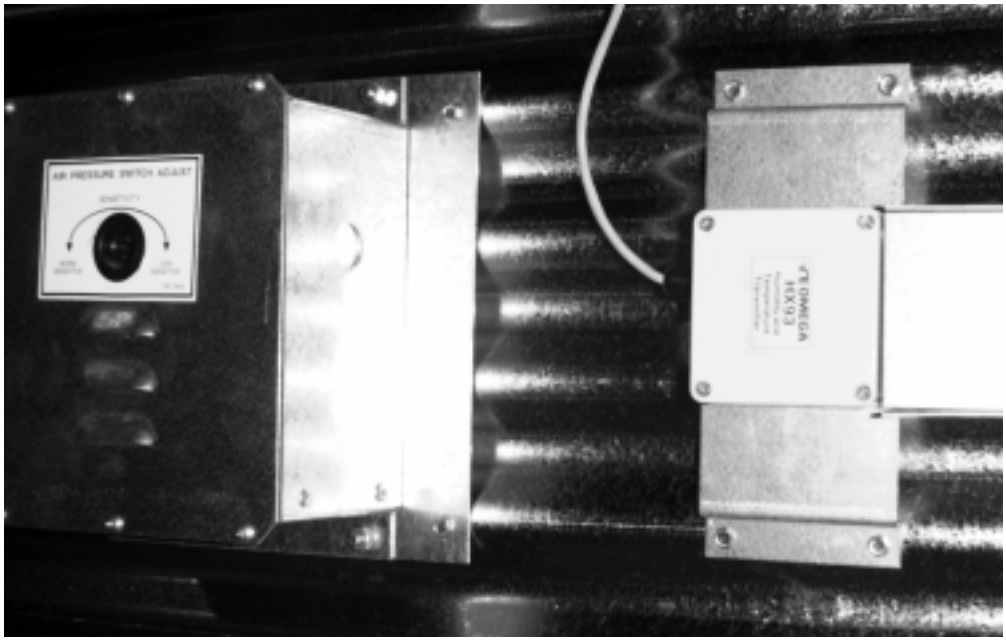

Figure A

Installing Optional Humidity Sensor

1. Humidity sensor should be mounted 6-8" right of the airswitch/temperature sensor box. See Figure A.

2. Using sensor as a guide drill or knock-out 7/8" diameter hole in the center of the plenum on the bin sidewall. If you are using sensor to sense drying air humidity.

3. Insert pipe nipple from sensor housing through hole in side wall and use self-drilling screws to mount to sidewall. See Figure B

4. Do not caulk sensor box openings on side of box, they are for air escape.

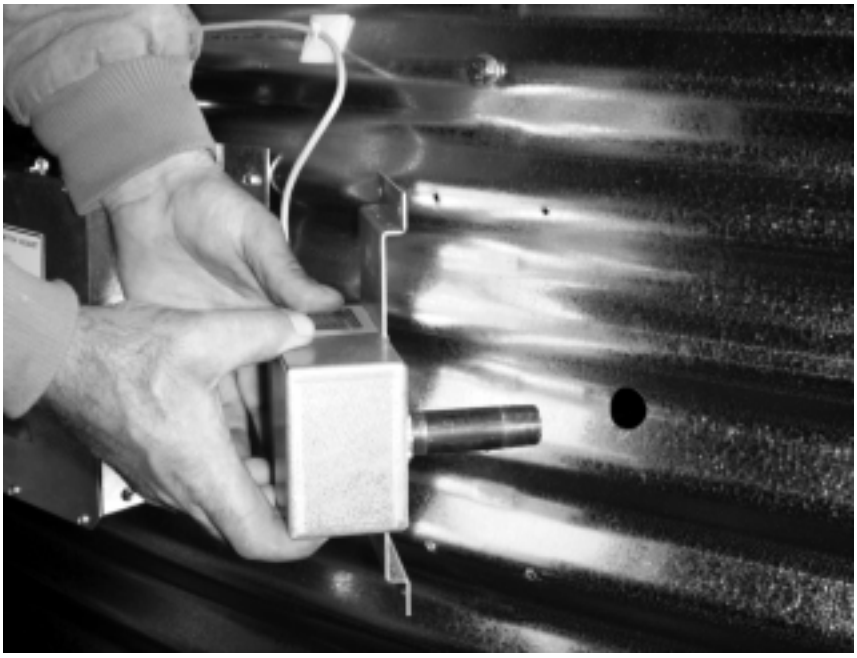

Figure B

The control panel display showing initial start up.

Standard electrical safety practices and codes should be used when working with a heater. Refer to the National Electric Code Standard Handbook by the National Fire Protection Association. *A qualified electrician should make all wiring installations.*

ALWAYS DISCONNECT AND LOCK OUT POWER BEFORE WORKING ON OR AROUND HEATER

Power Up

All safety and high limit switches are checked upon power up. If a safety or limit is open, the control displays it. The control cannot operate with a safety switch error, and the fan cannot turn on with an error condition. There is no way to bypass an error condition. It must be fixed. (See errors on page 21)

The air switch is also checked on power up. The air switch must indicate no airflow. This is necessary to check the function of the air switch. However, if the operator forgets and turns the fan on before the controller has been powered up, the controller locks up with the main display alternating between a "FAN" and "ON" message. This may be bypassed by depressing and holding the "FAN BYPASS" switch (lower right switch). Normal operating procedure should be to power up the controller with the fan off.

If multiple heaters are tied together, and the master detects that the slave fan is on (the air switch stuck?), the master will lock up displaying "SLA ERROR". This condition may be bypassed with the "FAN BYPASS" switch.

Normal Operating Displays With Heater Not Running

The main display shows the plenum temperature. If the dryer has not been running, the display should show outside temperature. The control is preset at the factory to display temperature in centigrade or fahrenheit.

"AIRFLOW" or "NO AIRFLOW" is displayed if air is flowing or not flowing. "RX TX" (receive, transmit) is displayed if multiple heaters are connected.

All safeties or high limits are continuously checked during the off mode. A limit switch open, or any other error condition will cause the display to show the limit or error condition.

When drying is not occurring, and the limit or error condition is corrected, the display returns to its normal output. This is not the case with an error or limit condition during the drying operation. This causes the display to lock up in the error display mode. This is to keep the display locked up with the condition illuminated. (see section on "Running the Dryer" for mode explanation on page 17).

The heater display with fan on (airflow).

Starting The Dryer

After heater power is turned on, the fan must be turned on. Attempting to start the dryer without the air switch indicating there is airflow will cause an airflow alarm to go off when the start switch is depressed. The airflow alarm is simply the entire display going blank, and the "NO AIRFLOW" message flashing for a few seconds. The display must show "AIRFLOW" before the dryer can be started.

To start the dryer, just push the "START" switch. The first message to come up will be the "PURGE" message--the drying process begins with a 10 second purge.

When multiple heaters are connected together, drying may be started from any heater control.

Setting Gas Pressure

1. At heater turn toggle switch to "ON" position.

2. Press the "PROGRAM TEMPERATURE" button.

3. Use the increase or decrease button to set the "PLENUM HIGH LIMIT SET POINT" to desired setting (100°-160°*).

4. Press the "PROGRAM TEMPERATURE" button to continue to set the "CYCLE SETPOINT". (hi-lo units only)

5. Use the increase or decrease buttons to set the "CYCLE SET POINT" to desired setting (90°-150°*) (hi-lo units only).

6. Press "programs temperature" button to continue to set the desired "relative humidity" setting, lower setting will run heater longer. (humidity sensor units only) Use arrow keys to set.

Programming the temperature differential.

7. Press the "PROGRAM TEMPERATURE" but ton to continue to set the "TEMPERATURE DIFFERENTIAL".

8. Use the increase or decrease buttons to set the "TEMPERATURE DIFFERENTIAL" to 10°*.

9. Press "progam temperature" button to continue to set "relative humidity differential". Use arrow keys to adjust to 5%. (Hudidity sensor units only).

10. Open all manual gas shut off valves, on and to the heater unit.

11 Start the fan unit.

12. Make sure that the blade is spinning in the right direction. If not place the toggle switch in the "OFF" position and correct the problem.

13. After the fan reaches full speed the display should read "AIRFLOW" in the upper right hand corner. If not adjust air switch. (See page 19)

14. Press the start button on the heater control.

15. After 10 seconds the burner should ignite. If not, turn "OFF" the toggle switch and then back "ON". Repeat 12-15.

*Temperatures are fahrenheit.

16. When the burner ignites the display should read "HI-FLAME " at the left of the display. Loosen the nut on the main regulator and turn screw in, to increase pressure and out to decrease pressure. The pressure gauges should be set at 10-15 lbs. for LP units, or 4-6 lbs.. for natural gas units. (use the charts on the following pages to set pressure)

17. Press the "PROGRAM TEMPERATURE" button to change the high limit set point. Press it again to change the "CYCLE SET POINT". (hi-lo units only)

18. Decrease the "CYCLE SET POINT TEM PERATURE" until the heater cycles to low flame. (hi-lo units only)

19. Open or close the low cycle ball valve until the gas pressure is 3-5 lbs. for LP, or 1-2 lbs. for natural gas. (hi-lo units only)

20. Increase the cycle set point to return to high flame. (hi-lo units only)

21. Watch heater run several minutes to make sure it cycles between hi and lo flame or on and off properly.

22. Hi-flame pressure should be adjusted so plenum reaches cycling temperature easily.

23. Adjust pressure on on/off units so that unit is on approximately 75% of the time.

Adjusting the Air Pressure Switch

1. Air pressure switch must be adjusted so that it will activate with lowest level of grain that will be dryed in bin.

2. Put grain in bin to level desired (low).

3. With heater on and fan off display on heater should read "no airflow".

4. Start fan. Heater display should now read "airflow".

5. If display does not read "airflow" remove cap from adjustment port and slowly turn screw counter clockwise until display does read "Airflow". Figure C

6. Shut fan off display should read "no air flow" when fan gets to half speed. If not repeat step 5.

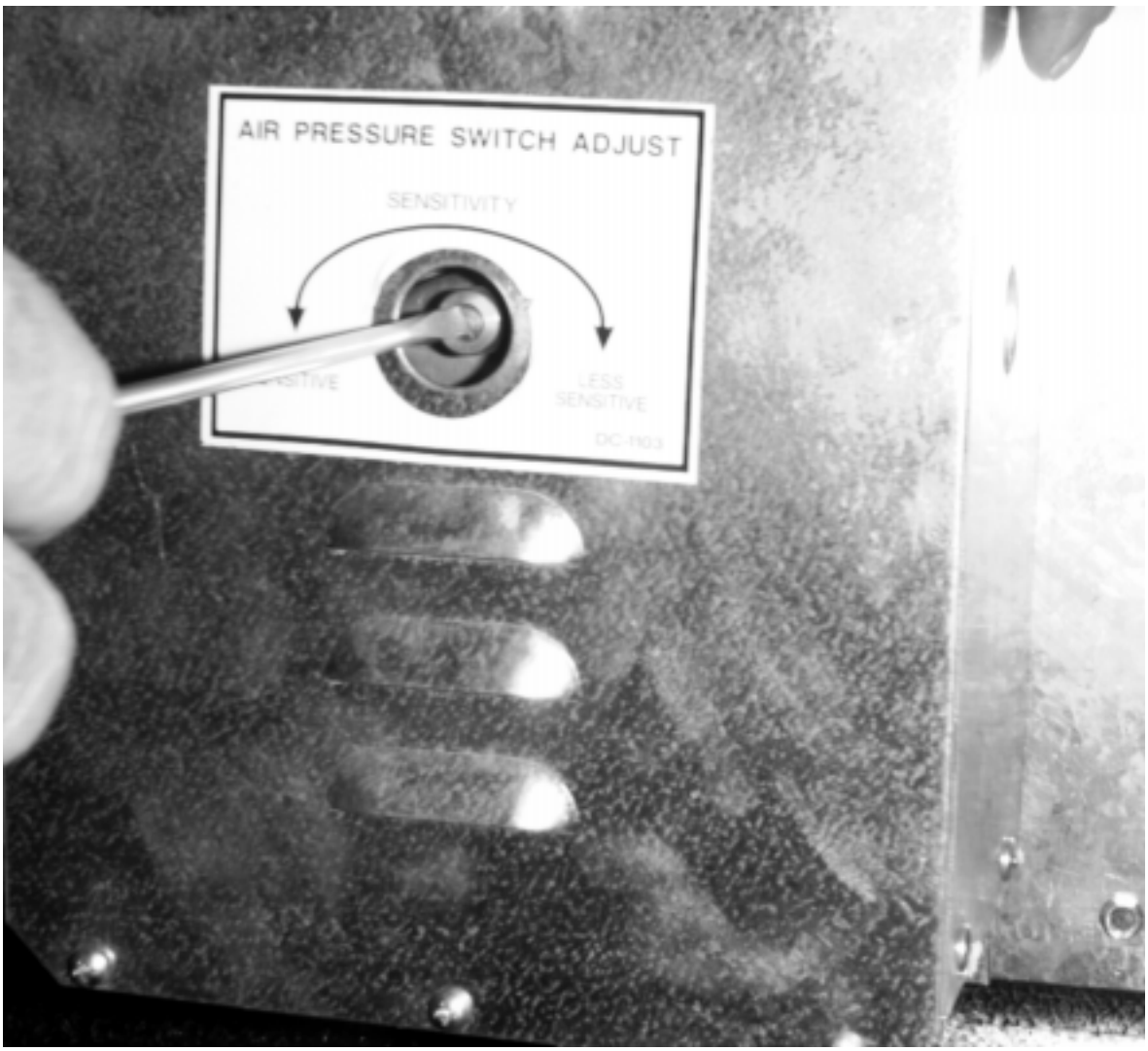

Figure C

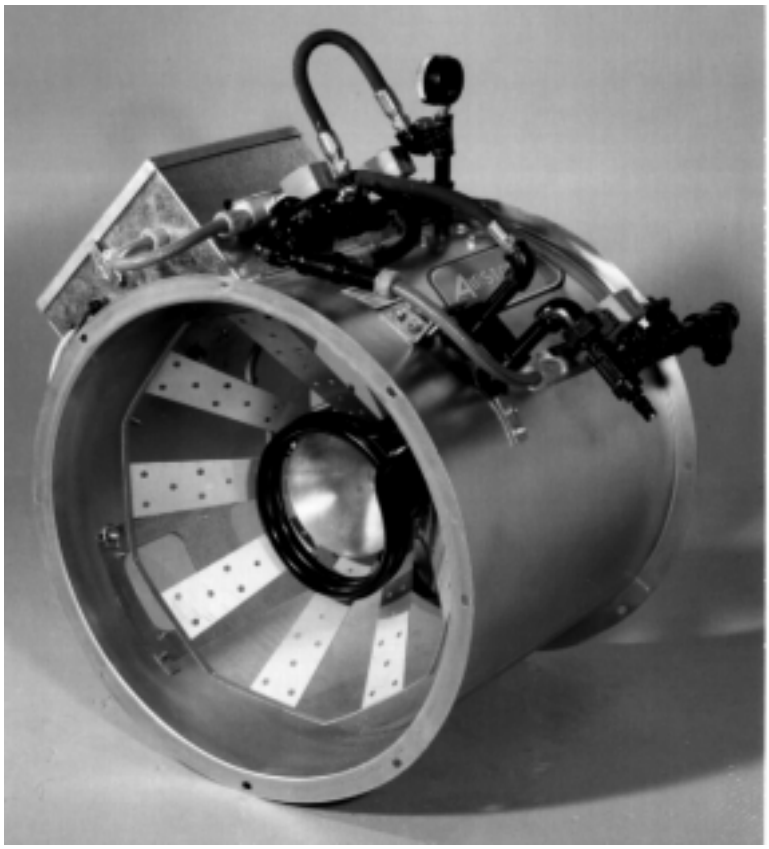

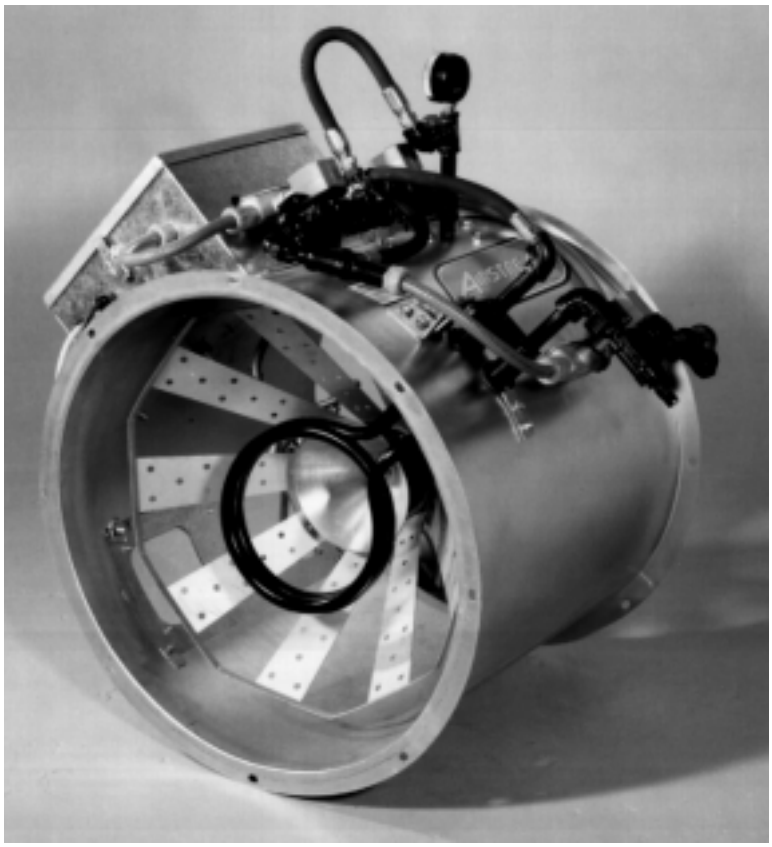

Adjusting the vaporizer coil on a liquid propane model. The top photo shows the setting in, and the bottom photo shows the coil out.

Adjusting The Vaporizor

1. Vaporizer should be adjusted so the vapor pipetrain runs warm to the touch (100°-120°F).

2. Loosen 5/16" bolt on adjustment bracket.

3. Swivel vaporizer away from flame if running too hot, closer to flame if too cold.

4. Move vaporizer only 1" at a time and allow a few minutes for tem perature to equalize.

5. Tighten 5/16" bolt and watch heater run for several minutes to verify adjustment.

Running The Dryer

The display will indicate "FLAME" when flame is sensed. If no flame is sensed, the "FLAME" message will be off. The display indicates what part of the cycle it is in. If the unit is a hi-lo dryer, the display will indicate whether it is in the "HI-FLAME" or "LO-FLAME" part of the cycle. (See "programming set points" page 21 for setting the hi-lo flame temperature). If the temperature is above the high temperature setting, the flame will be off, the "FLAME" message will be out and the display will be flashing "OFF-CYCLE".

If the flame is shut off because of the humidity sensor (humidistat), the display flashes "OFF-CYCLE HUMIDISTAT".

The limits are continuously checked during the drying operation. A limit switch open or any other error condition will cause the dryer to shutdown, and the fan will be shutdown. **If a limit opens, or an error condition occurs during drying, the control will lockup in the error display mode. Power must be shut off and back on to the control to clear the error condition--even if the error or limit that caused the shutdown has been corrected.** This is to keep the display locked up with the condition that caused the error, allowing the operator time to determine what caused the shutdown.

Programming Set Points

Depressing the "PROGRAM" switch (lower left) causes the display to enter the program mode. Each item below is programmed by using the up and down arrow switches. Holding down these up and down arrow switches for about 2 seconds will cause the numbers to increase/decrease rapidly until the switch is released. When finished programming an item, depressing the "PROGRAM" switch again will cause the new setting to be entered into memory, and the display will advance to the next function to be programmed.

Programming may be done at anytime (unless an error condition exists) even while the dryer is in operation.

Programming a system with Multiple heaters may be done at any heater control console. The information programmed is automatically transmitted to all other heaters when the programming is complete.

Hi Limit Set Point--The upper left cursor is flashing indicating the mode. If the plenum temperature increases above this point, the flame is shut off--"OFF-CYCLE" is displayed on screen.

Cycle Set Point--The upper 2nd from left cursor is flashing indicating the mode. **If the dryer is not a hi-lo dryer, this function is skipped.** If the plenum temperature increases above this point, the flame reduces to "LO-FLAME".

Humidity Set Point--The upper 2nd from right cursor is flashing indicating the mode. If the humidity is above this point the dryer operates normally--flame on and off at the high limit and cycle set points. If the humidity is below this point the dryer goes into the "OFF-CYCLE" mode.

Temperature Differential--The upper right cursor is flashing indicating the mode. If the flame shuts off because the temperature is greater than the high limit set point, the temperature must fall below the (Set Point minus Temperature Differential) for the flame to come back on.

Programming the high-limit set point.

On hi-lo units when the unit reaches cycle set point, the flame will switch to lo-flame and unit will not cycle back to hi-flame until (Set Point minus Temperature Differential) is reached.

Temperature differential would normally be set for 10-15 degrees F for high temp units, and 2-5 degrees F for lo-temp units.

Humidity Differential--The upper right cursor is flashing indicating the mode. If the flame shuts off because the humidity set point, the humidity must rise above the (Set Point plus Humidity Differential) for the flame to come back on. (Normally set to 5%)

Programming Hours To Shutdown

To change the hours to shutdown, depress and hold the "SHUTDOWN HOURS" switch. While holding in on the switch, depress the up and down arrow switches to alter the hours. Setting range is 0 to 200 hours.

Setting the cycle set point.

Drying Grain In The Hours To Shutdown Mode

While drying grain, depress and hold the "SHUTDOWN HOURS" switch. While holding in on that switch, depress the "START" switch. After depressing the start switch one time, the heater is in the shutdown mode. Then, the fan and heater shutdown when the time expires. This is indicated by the lower left cursor flashing.

Depressing the start switch again (while holding in on the "SHUTDOWN HOURS" switch) will cause only the heater to shut off. This leaves the fan on when the time expires. This is indicated by the 2nd from lower left cursor flashing. Depressing the start switch one more time returns the heater into the continuous--non-shutdown mode.

Run Hours Display

Run hours are recorded when the controller detects that the fan is on (airflow). The hours may be viewed by depressing the "HOURS" to get hours and "HOURS X 1000" to get the number of 1000 hours accumulated.

Multiple Heater Notes

When multiple heaters are connected together, the temperature and humidity sensors must be connected to the master.

Modulating Valve Operation

1. The modulating valve regulates gas flow through the heater based on sensing unit in the plenum, and maintains a constant drying air temperature.

2. The sensing bulb of the modulating valve should be mounted through the bin wall with the side reading "top" up. The bulb reacts to temperature. It changes the amount of gas (increase or decrease), burning warmer or cooler depending on the position of the valve SET POINT. If the bulb is cooler than it was at the SET POINT, the bulb senses the cooler temperature and opens the valve further so more heat is applied to the drying air. If the bulb is warmer than it was at the SET POINT, the valve closes further and reduces the temperature until the air is at the valve SET POINT.

3. It is important that the pressure regulator be set high enough to allow the modulating valve to deliver enough gas to maintain the plenum temperature necessary. The regulator is normally factory set at 15 psi (propane units). To set the regulator, run the heater and turn the modulat ing valve T-handle in. This gets full line pressure to the burner. Then adjust regulator to read 15 psi (depending on the plenum temperature needed).

4. Turn the fan and heater on. To set the modulating valve, turn the T-handle out (counterclockwise) until loose and wait a few minutes for the plenum temperature to equalize. When the temperature under the bin has equalized, gradually turn T-handle in (clockwise) about 1/2 turn at a time. Wait until temperature under bin has equalized as before. If temperature under bin is less than the desired temperature, continue turning T-handle in, increasing gas flow and waiting for plenum temperature to equalize until the desired temperature is the stable temperature of the plenum. If temperature under bin is the same 10 minutes after you last made any adjustments to the T-handle you can be certain that the temperature under the bin is the SET POINT of the valve. **1 turn of the T-handle equals approximately 7 degrees F of temperature.**

5. The valve will now keep the plenum temperature at the set point regardless of ambient conditions as long as humidistat or thermostat do not shut down the heater. A bypass orifice is used to maintain a small flame when outside temperature is near or above the set point of the valve. The bypass insures steady application of heat at minimum gas flow operation. Bypass orifice will only operate correctly if pressure regulator is set correctly.

6. To observe how the modulating valve increases the efficiency of bin drying, check the gas pressure of the unit in the morning and compare to the pressure read mid-afternoon. If the ambient (outside) temperature is significantly greater later in the day (as normal), the gas pres sure will be less. Since less heat is required to maintain the same temperature in the plenum, the modulating valve will have reduced the amount of gas used by the heater.

Configuration Dip Switches (Normally Done At GSI)

These switches are used to configure the heater control for various types of heaters.

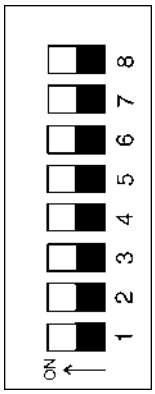

Stand alone heater with no slaves, all dip switches in the off state.

Dip switch number 3 by-passes air pressure switch when turned on. **This switch should only be used while trouble-shooting heater. Never leave Heater running with air pressure switch by-passed.**

Multiple heaters connected together through the serial link.

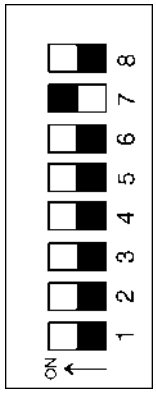

Master with one slave-dip switch 7 on/all others off.

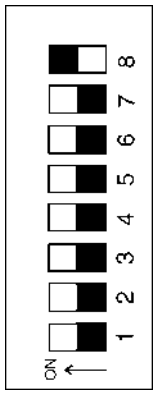

Master with two slaves-dip switch 8 on/all others off.

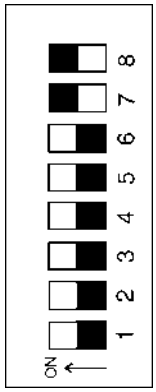

Master with 3 slaves-dip switch 7 & 8 on/all others off.

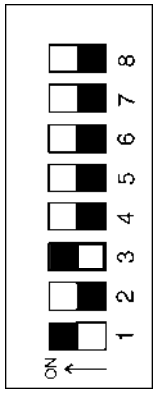

Slave #1-dip switch one and three on/all others off.

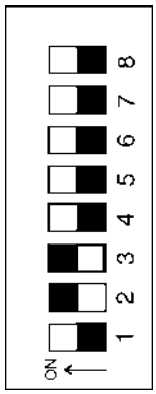

Slave #2-dip switch two and three on/all others off.

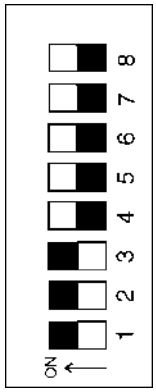

Slave #3-dip switch one, two and three on/all others off.

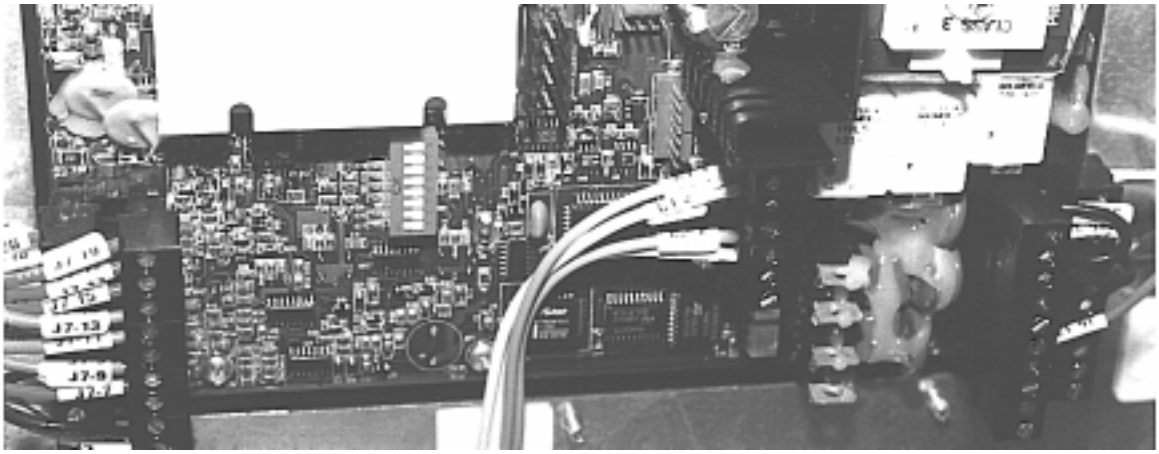

The backside of the control board, showing the dip switch placement.

Limit Switches

The following limit switch errors light up individually on the heaters LCD screen: PLENUM, HOUSING, VAPOR, TEMP HI LIMIT.

Note: When a shutdown does occur due to an error condition, the amount of time elapsed since the shutdown can be viewed by pressing the down arrow switch (up to 218 Hours).

Multiple Heater Error Conditions

If two or more heaters are connected together through the serial link, and the master cannot communicate with a slave controller, the master will display "SLA" on the main display and the "RX" "TX" symbols will be flashing.

If a limit switch error or one of the error numbers 1 through 8 occurs, that error is displayed on the slave where the error originates. The master displays "SLA ERROR".

Misc Error Numbers

1

Temperature probe 1 open.

2

Temperature probe 1 short.

3

Temperature probe 2 open.

4

Temperature probe 2 short.

5

Airflow open.

6

Airflow short.

7

Illegal flame sense.

Error 7 is most likely caused by stuck open solenoid. Error 7 will not shutdown fan until loss of flame is detected by control.

8

Flame probe short error.

000

This indicates that one of the other on screen errors (vapor, plenum or housing temp hi-limit or flame out or no airflow has occurred).

9

Slave #1 inconsistent with master with either the drying grain flag or the LP main solenoid or cycle solenoid.

Most likely the slave got reset powering up with the solenoids off.

10

Slave #2 inconsistent.

Same as error 9 for slave #1.

11

Slave #3 inconsistent.

Same as error 9 for slave #1.

12

Wrong voltage.

Dip switch #5 is the voltage selector switch. If dip switch #5 in "ON" that selects 240 VAC. If the unit has only 120 VAC applied, error 12 will show up. If dip switch #5 is "OFF" that selects 120 VAC. If the unit has 240 VAC applied error 12 will show up.

This is important because if the fan heater is set up at GSI for 120 VAC and the customer connects to 240 VAC the heater control will work, but if allowed to operate the solenoids will have 240 VAC applied to them which will damage solenoids.

13

+11 volt DC shorted to ground.

(Errors 9 through 11 are displayed only if multiple heaters are tied together through serial link).

Note: Temperature sensor connection-the temperature sensor (bolt) must always be connected to the master.

The heater control display showing error #7.

All Airstream heaters are constructed of durable weather-resistant materials, so a minimum amount of service should be required; however before the unit is started for the first time each season there are a few items that need to be checked out. All damaged parts should be repaired or replaced.

1. Disconnect and lock out power to fan and heater. Open control box lid and inspect all components for moisture, vibration or rodent damage. Inspect and tighten all loose terminal connections. Replace any damaged wiring.

2. Remove burner orifice tube and inspect for dirt or foreign material. Clean out if necessary.

3. Inspect burner for wear or foreign material in any of the ports. Clean or replace parts if necessary.

4. Inspect the spark plug and flame probe for corrosion and damage. Clean or replace if necessary.

5. All control boxes and components should be checked yearly for signs of moisture accumulation. Any moisture will affect microprocessor control system used on this heater. The conduit and control boxes are particularly susceptible and should be checked frequently. Any accumulation of dirt or foreign material can also cause problems with the electrical system.

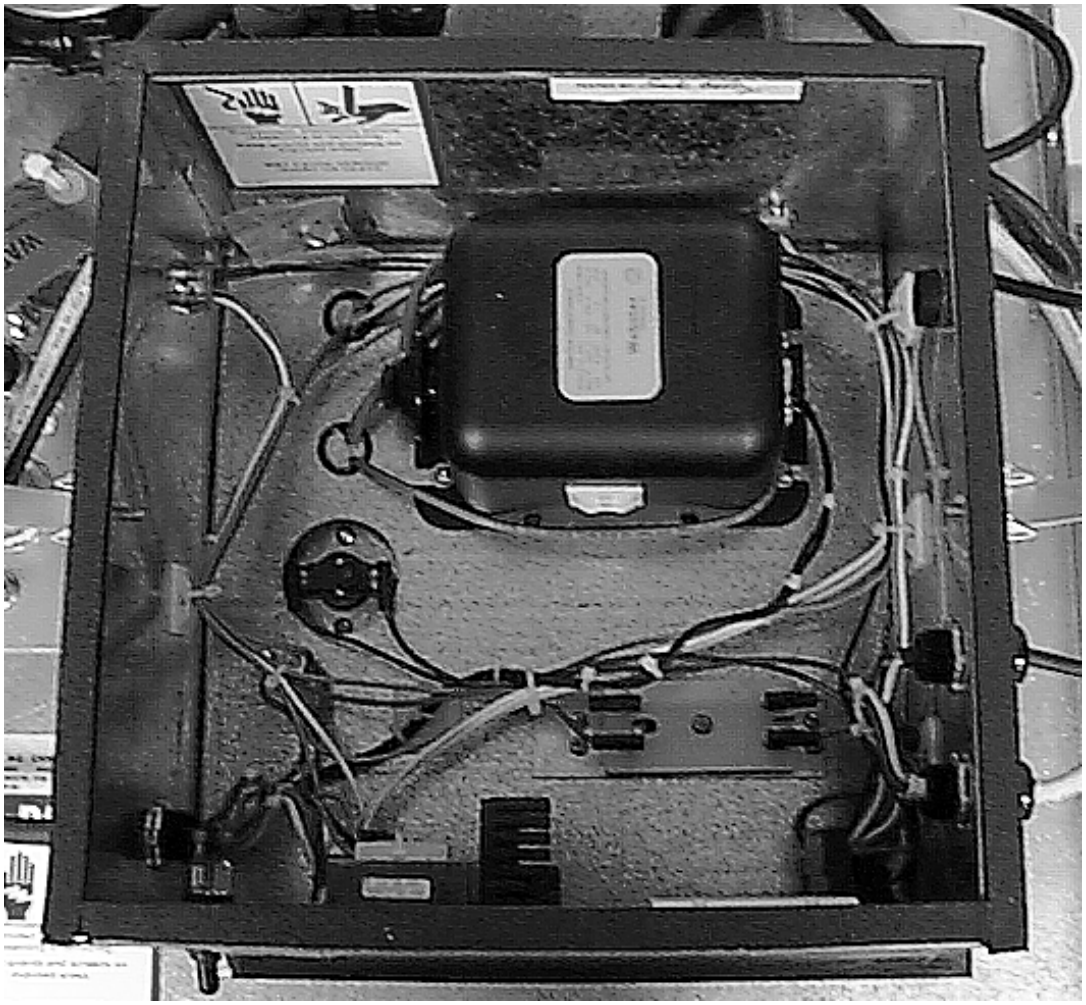

The Series 2000 control box.

WIRING DIAGRAM

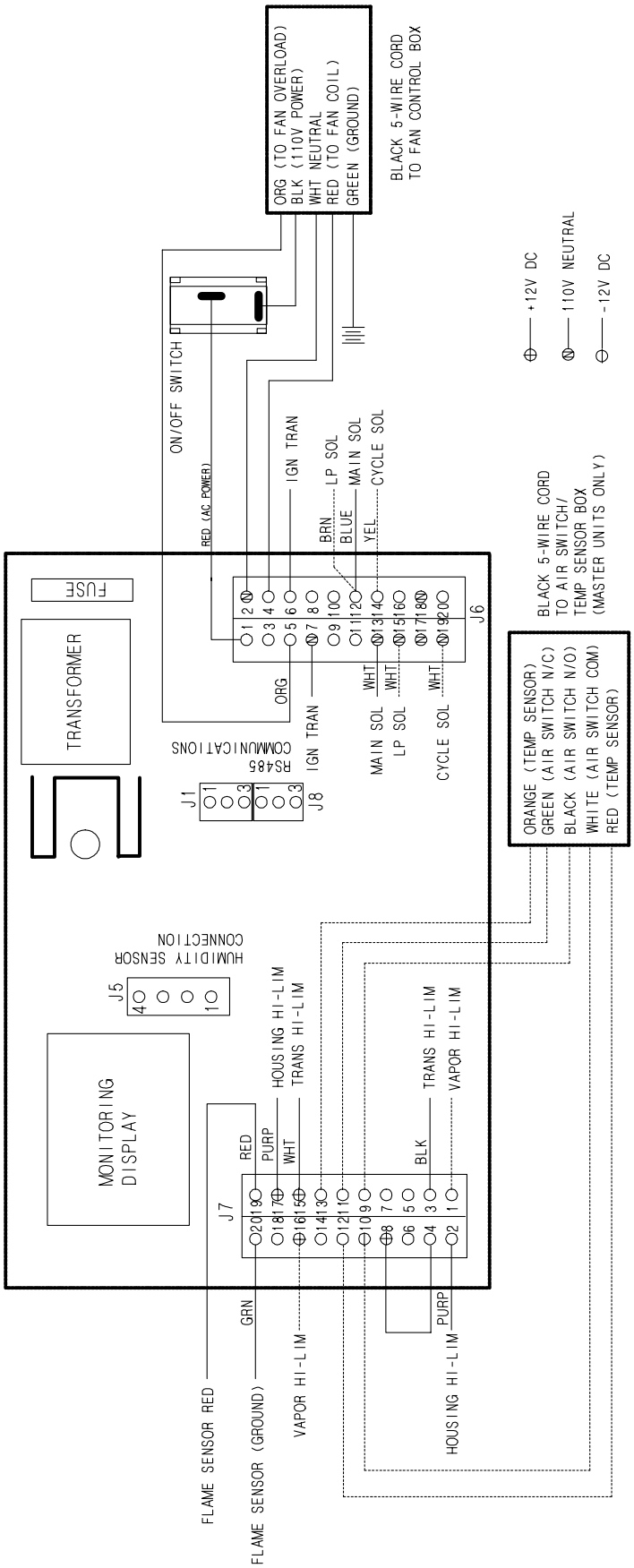

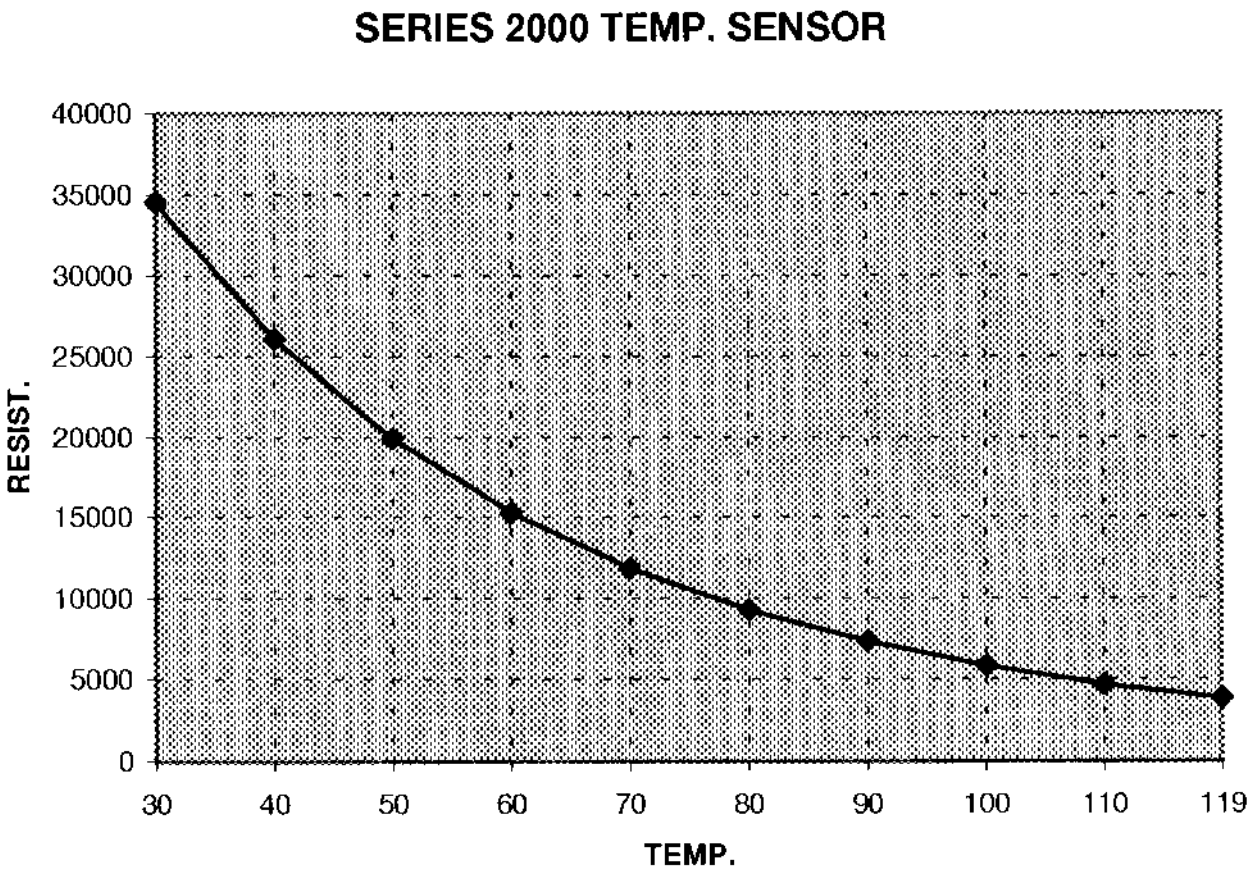

The Temperature sensor used with the Series 2000 Heater is a thermistor. A thermistors electrical resistance (ohms) varies according to temperature. As shown in the chart for this thermistor the resistance rises with colder temperatures. If the temperature around the sensor is known, the resistance, when checked with an ohm meter, should match the chart.

If the resistance does not match check for moisture, loose wires or a bad sensor. A sensor should be kept on hand because if it fails the heater will not operate.

Programing Instructions for Series 2000 Heater

1. Turn Control Power on dryer to the off position.
2. Locate programming jack (P7) on back of computer. (See page 72).
3. Plug the series 2000 cable into programming jack and into programmers DB-9 jack.
4. Be sure that the rotary switch on the programmer is set to position 8.
5. Turn on Control Power to the dryer.
6. The four (4) lights on the programmer will come on, then three (3) will go out leaving the power light still on.
7. Push the start button on the programmer to start the transfer of Software.
8. The busy light will flash until the transfer process is complete.
9. When completed, the pass light will flash indicating a successful transfer.
10. If the fail light flashes then check your connections and repeat the above process.
11. Turn Control Power on dryer to off and remove the cable.
12. Turn on the dryer and the opening screens should indicate the newer version of software.

Programmer Hook Up

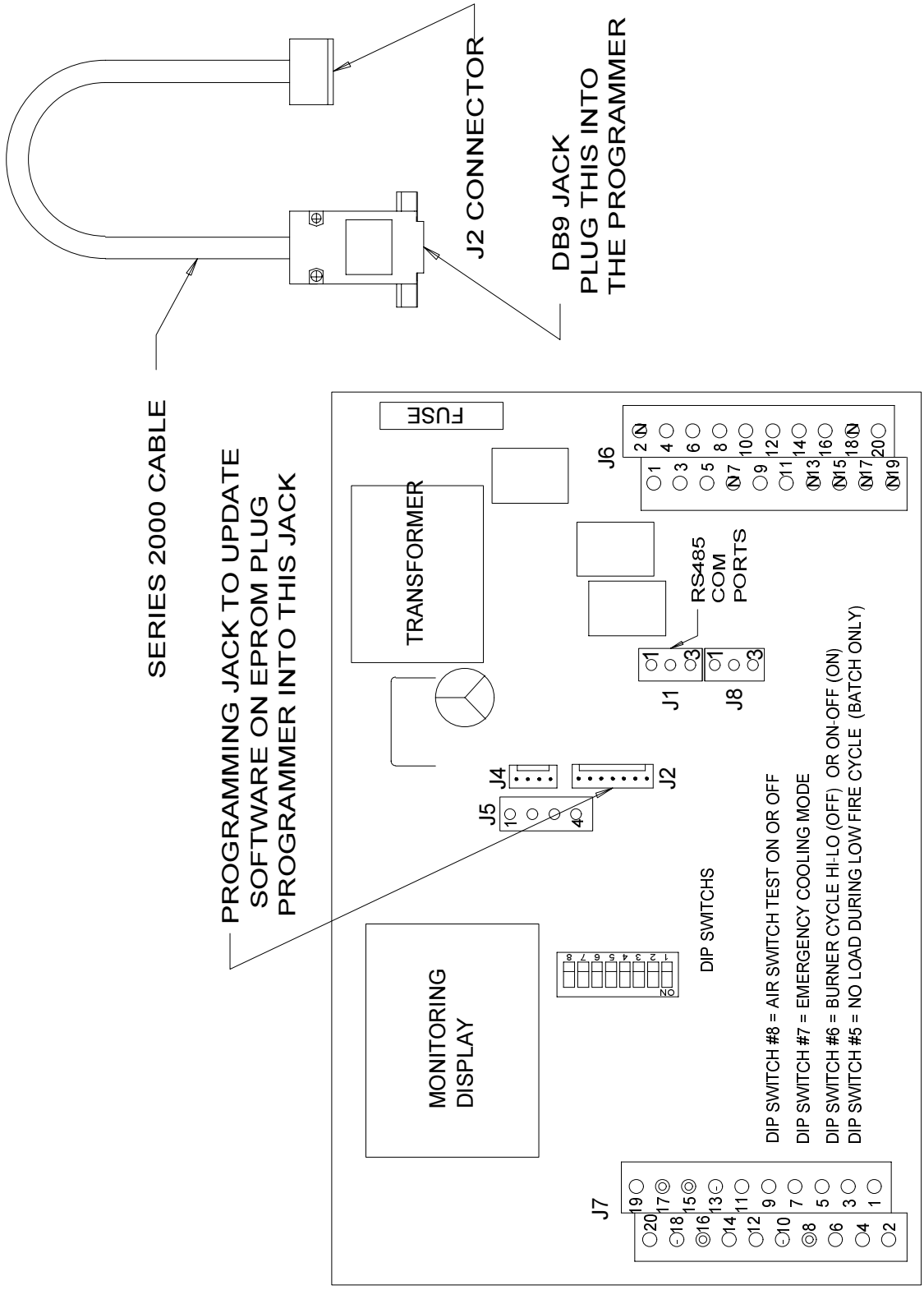

Heater Electrical Installation (230V Fans)

THESE INSTRUCTIONS ARE FOR HEATER INSTALLATION ON FAN UNITS WITH 230V MOTORS.

BE SURE POWER IS DISCONNECTED AND LOCKED OUT BEFORE INSTALLATION! FAILURE TO DO SO MAY CAUSE SERIOUS INJURY OR DEATH.

1. Connect power cord to fan control box.

2. Make field connection of wires in fan box as shown in Figure 2. 110V power supply or .5KVA 460V to 110V transformer must be used to supply power for heater. IMPORTANT! HEATER MUST BE INTERLOCKED WITH FAN FOR SAFE OPERATION.

3. Connect deluxe thermostat control (optional) as shown in Figure 2. IMPORTANT! THERMOSTAT MUST BE INSTALLED FOR SAFE OPERATION.

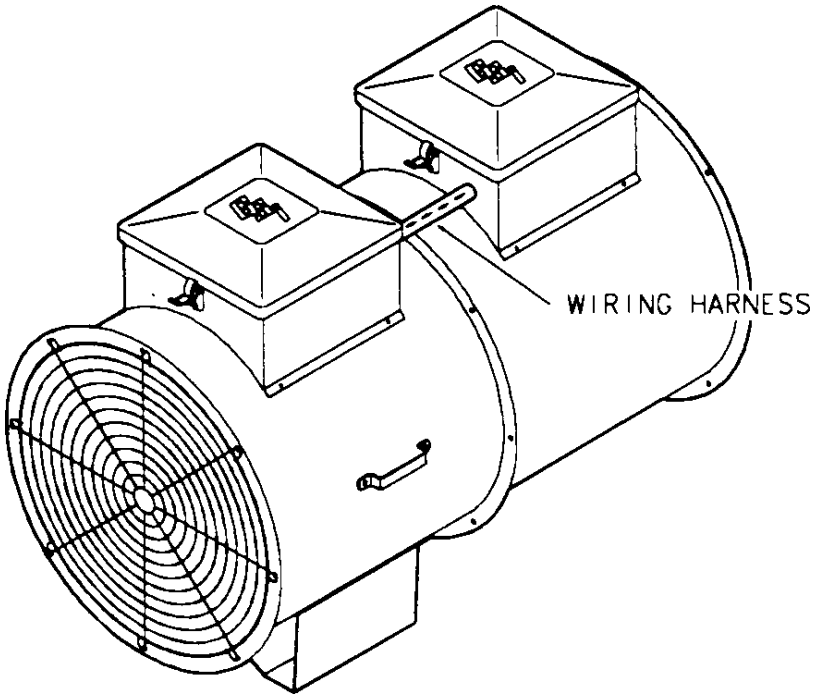

Figure 1: Illustration of deluxe vane axial heater wiring installation on a fan unit.

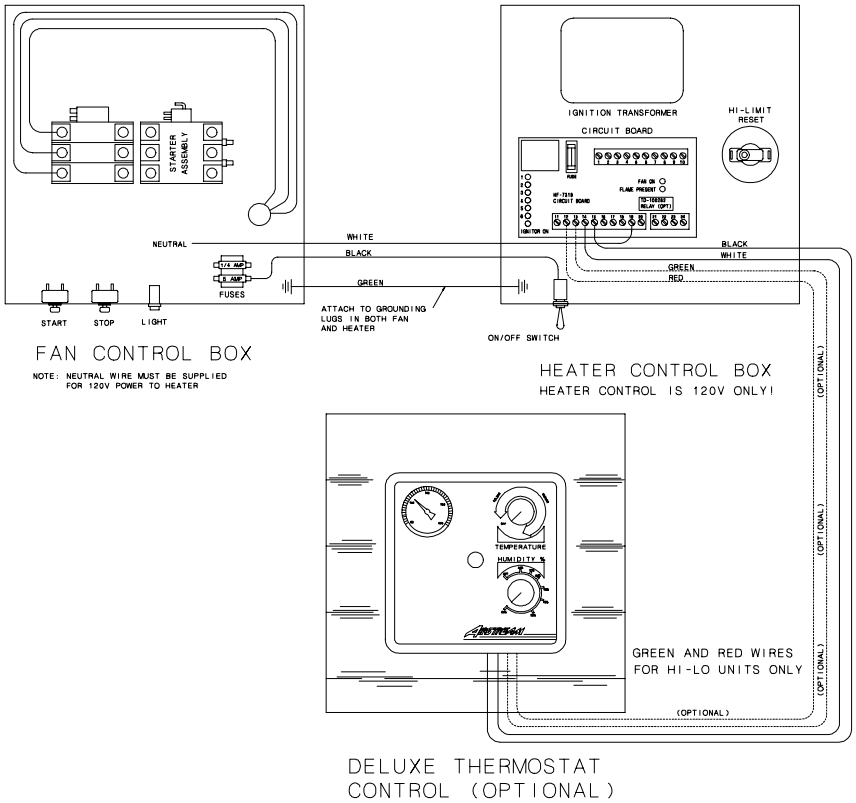

Figure 2: Deluxe vane axial heater wiring to fan unit.

Plenum Thermostat Mounting

The plenum thermostat is the 4 x 4 white box with knob that is preconnected to heater when heater is ordered with thermostat.

1. 24" to the right side of the transition, drill one $^{3}/_{8}$" hole (high temp) or 1 $^{1}/_{2}$" hole (low temp) in the center of the plenum in a valley (4.00" corrugation) or hill (2.66" corrugation) on bin sidewall.

2. Insert the probe through the hole.

3. Position the housing so that the tabs are vertical, and the cord exits the housing horizontally.

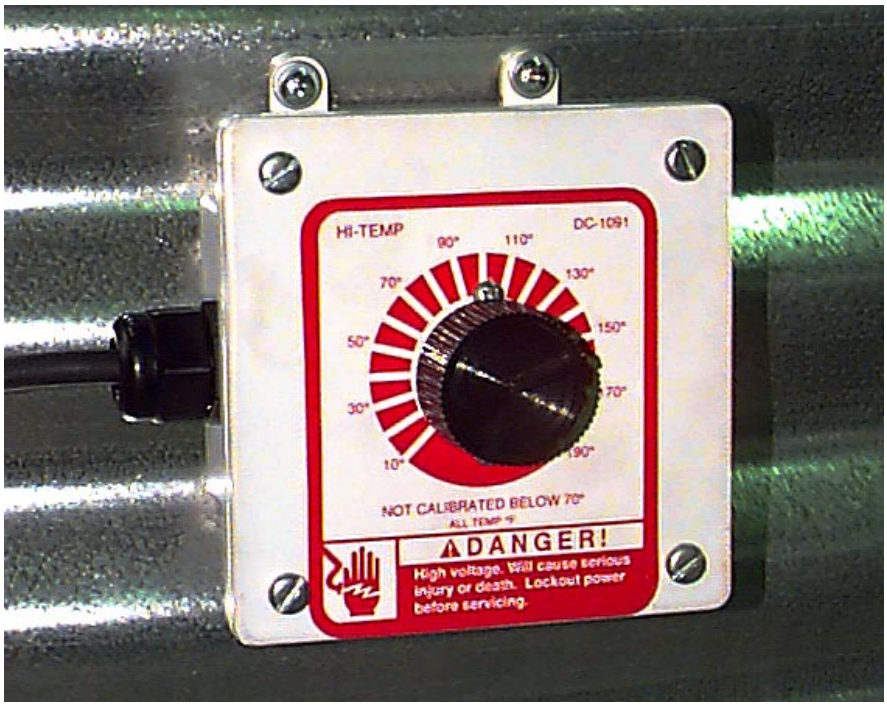

Plenum thermostat mounting on bin wall.

4. Use 4 self drilling screws to mount the housing to the bin sidewall.

5. Caulk between the housing and the sidewall to seal.

Transition Hi-Limit Installation

1. Mark location on transition one (1) foot up from the bottom (entrance collar) and centered in the transition.

2. Drill or knock out 7/8" diameter hole on marked location.

3. Install transition hi-limit using supplied self drilling screws.

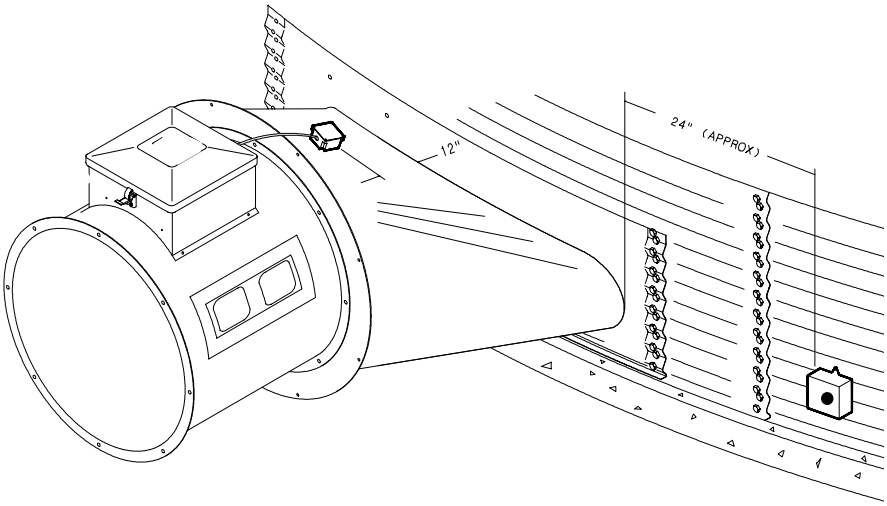

Figure 2: The transition connecting the Vane Axial Heater to the bin with the plenum sensor in place.

Annual Heater Inspection

All GSI heaters are constructed of durable weather-resistant materials, so a minimum amount of service should be required; however before the unit is started for the first time each season there are a few items that need to be checked out. All damaged parts should be repaired or replaced.

1. Lock out power to heater. Open control box lid and inspect all com ponents for moisture, vibration or redent damage. Inspect and tighten all loose terminal connections. Replace any damaged wiring.

2. Remove burner orifice tube and inspect for dirt or foreign material. Clean out if necessary.

3. Inspect burner for wear or foreign material in any of the ports. Clean or replace parts if necessary.

4. Inspect the spark plug and flame probe for corrosion and damage. Clean or replace if necessary.

For Units Using HF-7318 Control Board

2 Deluxe heaters may be connected to one grain drying system and wired so they cycle together. One of the heaters should have a thermostat connected to it as per the installation instructions. That heater will be referred to as the master. The other heater (without the thermostat) will be referred to as the slave.

Installation For Standard Units

1. Install relay base (TD-100283) in master heater control box.
2. Connect wire between term 6 on circuit board and terminals 14 on relay base in master heater.
3. Connect wire between term 13 on relay base and terminals 8 on circuit board in master heater.
4. Run 2 wires (18 gage) between master and slave heaters.
5. Connect wires to terminal 5 and 9 (points A and B) on relay base in master heater.
6. Connect wire from terminal 9 in master to terminal 14 (point F) in slave unit.
7. Connect wire from terminal 5 in master to terminal 15 (point E) in slae unit.
8. Install relay (TD-100282) in relay base.

Additional Steps For Hi-Lo Units

1. Run 2 wires (18 gage) between master and slave unit.
2. Connect wires to terminals 21 and 22 (points C and D) on circuit board in main heater.
3. Connect wire from terminal 21 in master to terminal 12 (point H) in slave unit.
4. Connect wire from terminal 22 in master to terminal 13 (point G) in slave unit.
5. Install relay (TD-100282) in relay base.

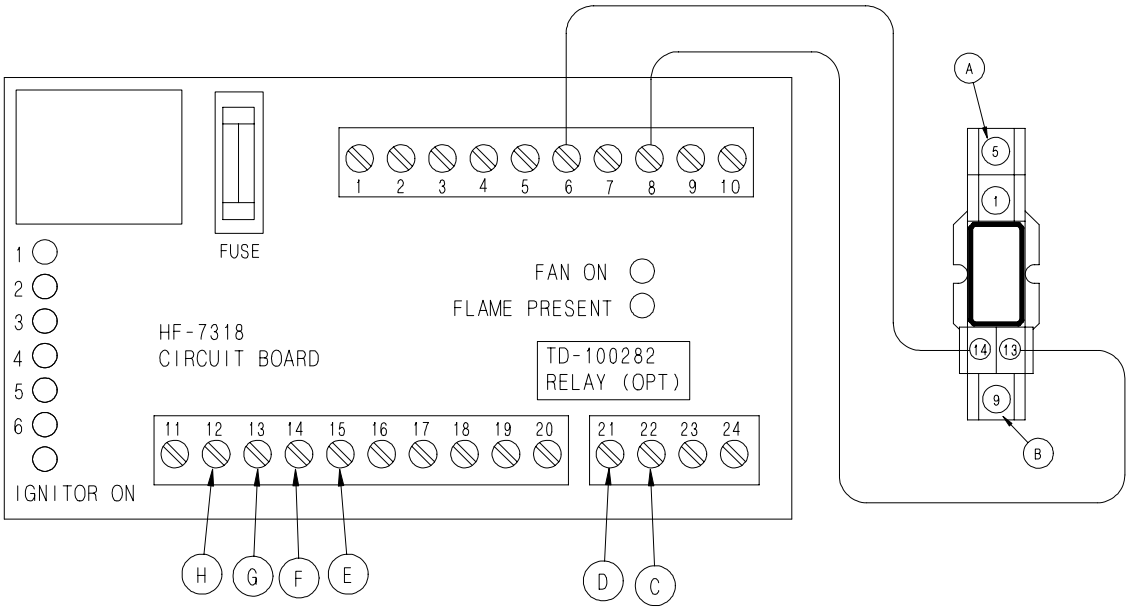

Figure 4: The HF-7318 control board.

DELUXE HEATER WIRING DIAGRAM

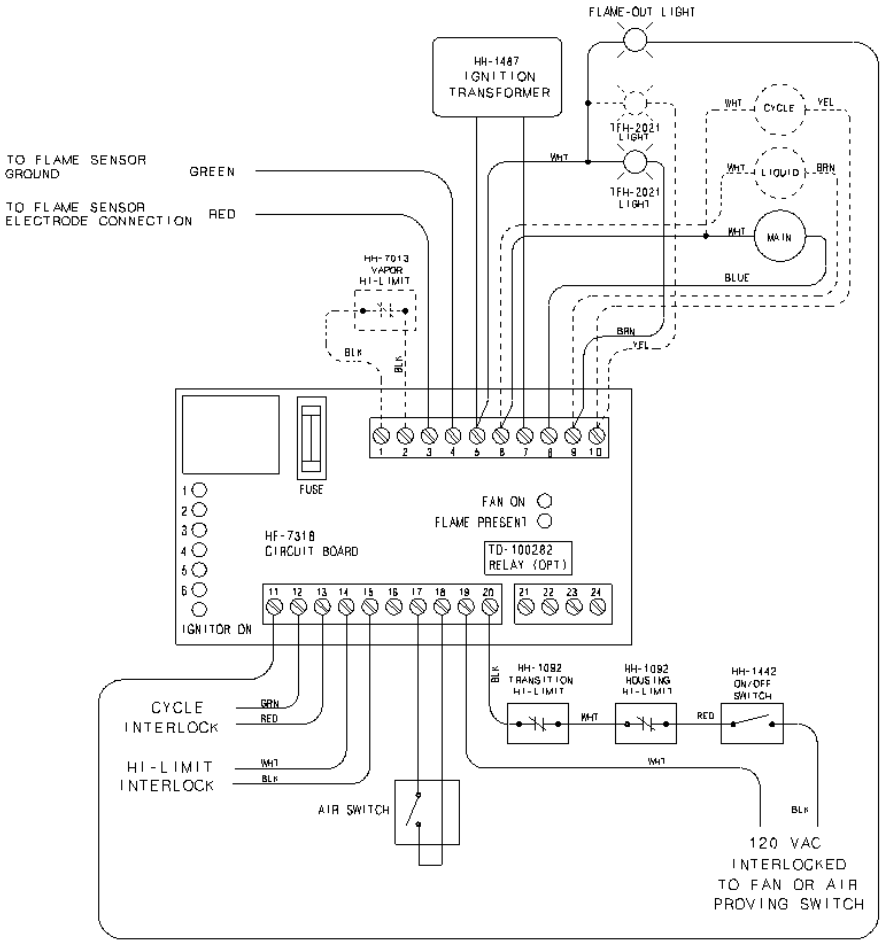

● INDICATES LIGHT ON ○ INDICATES LIGHT OFF

INDICATION	POSSIBLE CAUSE	POSSIBLE SOLUTION
○○○○○○ 1 2 3 4 5 6	Bad On/Off Switch	Replace Switch
	Heater Housing Hi-Limit	Reset Or Replace Hi-Limit
	Transition Hi-Limit	Reset Or Replace Hi-Limit
	No Power To Heater	Check Heater
●○○○○○ 1 2 3 4 5 6	Blown Fuse	Replace Fuse
●●○○○○ 1 2 3 4 5 6	Flame Sensor (if flame present light on)	Clean Or Replace Flame Sensor
	Control Board	Replace Control Board
	Air Switch (if fan on light not on)	Check Air Switch
●●●○○○ 1 2 3 4 5 6	Vaporizor Hi-Limit	Adjust Vaporizor Coil Replace Vapor Hi-Limit
●●●●○○ 1 2 3 4 5 6	Humidistat/Thermostat	Temperature Reached Replace Thermostat Or Humidistat
●●●●●○ 1 2 3 4 5 6	Spark Plug	Clean Or Replace Spark Plug
	No Fuel To Burner	Check Fuel Supply
	Bad Solenoid	Replace Solenoid

●●●●●○ 1 2 3 4 5 6 **WAIT FOR 20 SECOND PURGE DELAY TO TROUBLESHOOT!** INDICATING LIGHTS SHOWN ON LEFT SHOULD BE LIT WHEN UNIT IS OPERATING PROPERLY

DC-1161

STANDARD HEATER WIRING

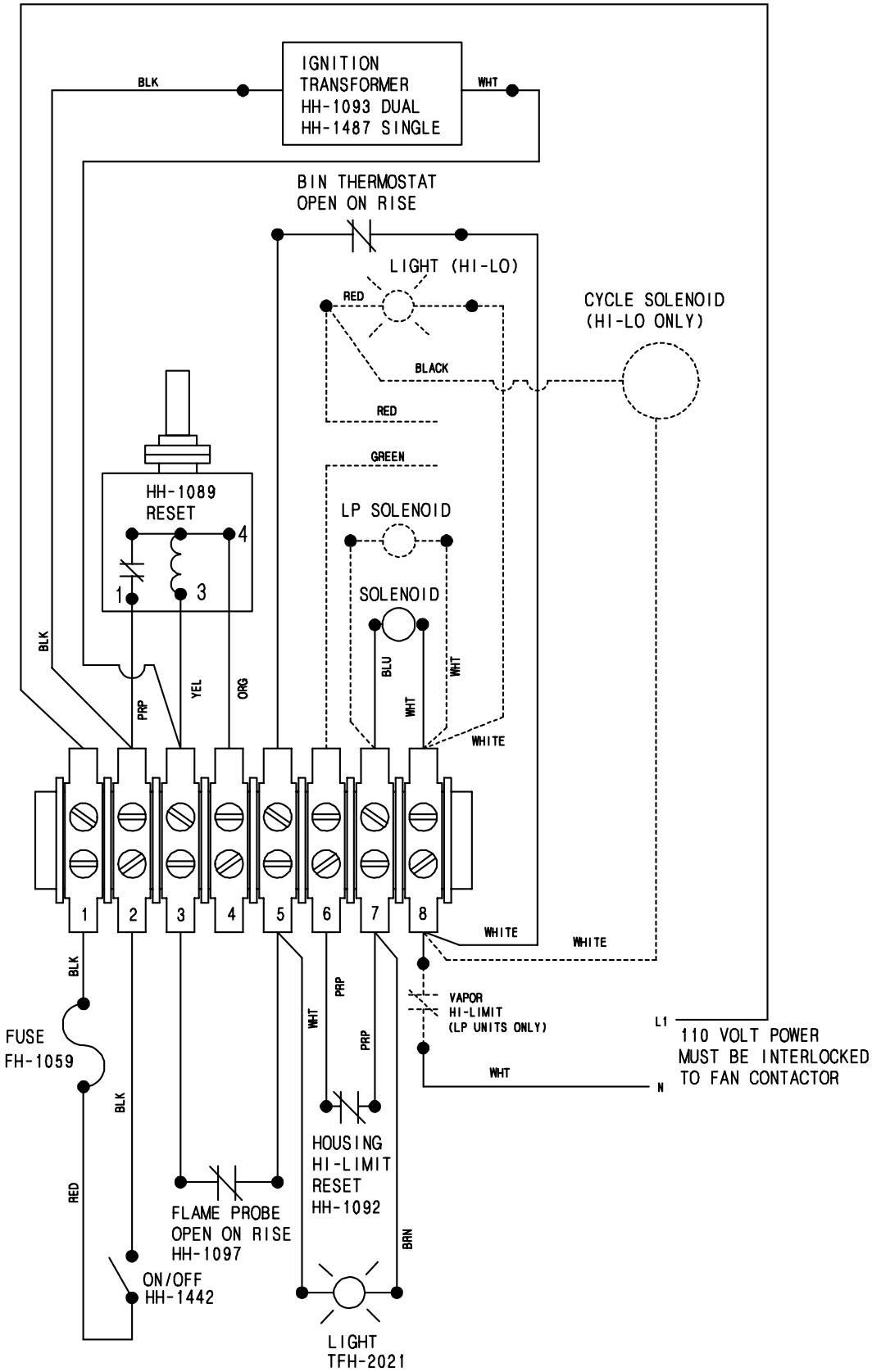

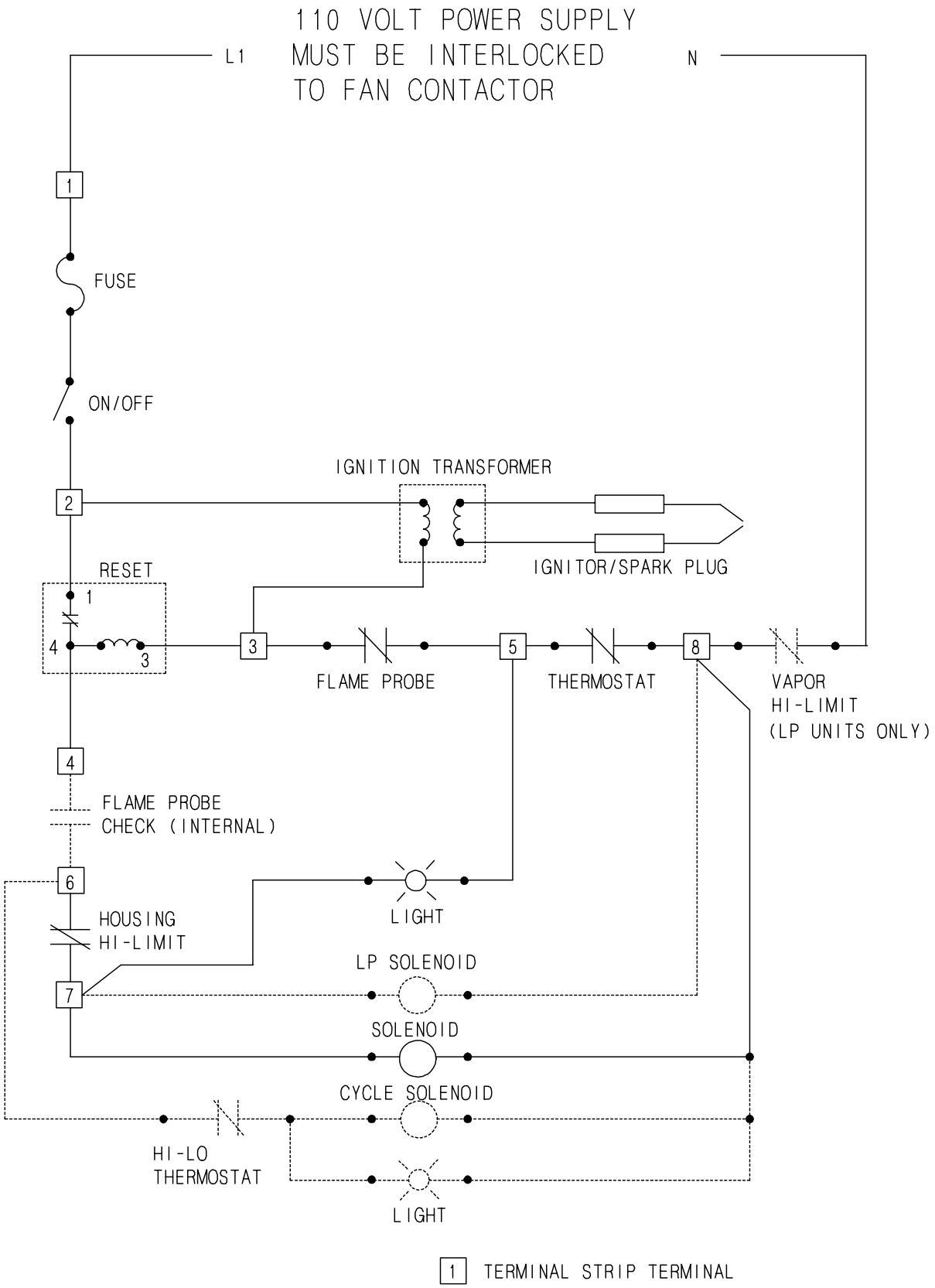
110 VOLT POWER SUPPLY
MUST BE INTERLOCKED
TO FAN CONTACTOR
L1
N
1
FUSE
ON/OFF
IGNITION TRANSFORMER
2
IGNITOR/SPARK PLUG
RESET
1
4
3
3
FLAME PROBE
5
THERMOSTAT
8
VAPOR
HI-LIMIT
(LP UNITS ONLY)
4
FLAME PROBE
CHECK (INTERNAL)
6
LIGHT
HOUSING
HI-LIMIT
LP SOLENOID
7
SOLENOID
CYCLE SOLENOID
HI-LO
THERMOSTAT
LIGHT
1 TERMINAL STRIP TERMINAL

TROUBLE-SHOOTING FLOW CHART

This chart should be used step by step to troubleshoot heater if heater does not start immediatly after turning on switch. This troubleshooting flow chart requires use of a voltmeter to check for 110 volts on designated terminals on terminal strip in heater. **Always use voltmeter to check between terminals that are designated not between terminals and ground.**

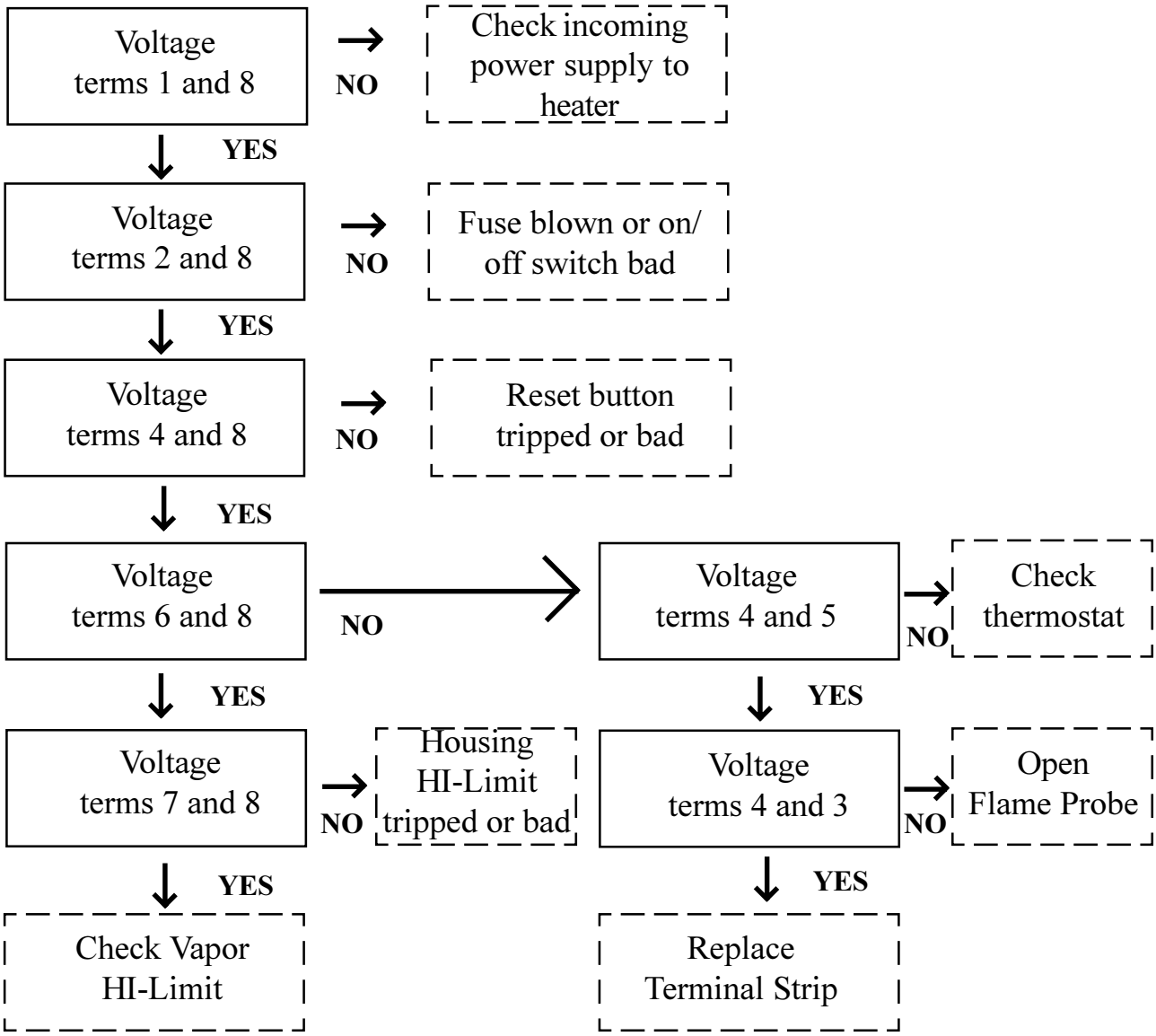

TROUBLE SHOOTING CHART

TROUBLE	PROBABLE CAUSE	CHECK-OUT PROCEDURE
Burner will not fire. No gas pressure on gage. No ignition spark.	Heater not wired in	Visually check fan control box to see if wires are connected.
	Fan not running	Fan contactor must be energized for heater to run
	Blown fuse / Bad on/off switch	Visually check fuse. Check for power on terminals 2 and 8. If no power check on/off switch.
Burner will not fire. No gas pressure on gage. Ignition spark is constant.	Housing Hi-limit Switch	Reset switch. With fan running check for 110v power between terms 7 and 8.
	Flame Probe open	Remove wires from flame probe and check with ohm meter. Probe should be closed when cold.
	Reset switch	Reset switch. If switch will not reset after 60 seconds replace. If reset button pops out again after 30-60 seconds check flame probe to see that it is getting hot. If flame probe appears to be getting hot then replace the flame probe.
	Gas supply	Make sure all valves are on to heater and gas tank is not empty.
Burner will not fire. Gas pressure on gage. No ignition spark.	Terminal Strip	Turn power off to heater. Connect flame probe wires together. Check for power on terms 6 and 8. If no power is present check for power on terms 4 and 8 if power is present replace terminal strip.
	Ignitor / Spark Plug	Turn gas off to heater. Check gap on ignitor. Check porcelain for any signs of cracks. Remove plug wire from spark plug / ignitor. **Carefully** holding plug wire by insulation try to get an arc between end of wire and heater housing (or other wire if using 2 pole transformer.)
	Ignition transformer / Plug wire	Turn gas off to heater. If no spark present after checking ignitor remove spark plug wire from ignition transformer. Check for spark at ignition transformer with an insulated screwdriver. Spark should jump a minimum 1/4" gap. Replace transformer if no spark is established. If spark is established the replace plug wires.
Burner will not fire or fires for 60 seconds and kicks out reset switch. Gas pressure on gage. Ignition is sparking.	Plugged orifice	Check for gas at burner. If no gas remove pipe train and check orifice and burner or burner ring for blockages.
	Flame Probe	Check to be sure flame probe is in good condition and is located in flame. Flame probe contacts should open when probe gets hot.
	Incorrect Supply Voltage	Voltage to heater must be 110 volts AC
	Regulator set to low	See that flame burns continuous and is not intermittent. On ring burners be sure flame burns completely around ring.
	Moisture in fuel	Have tank and lines check by qualified gas service man
	Heater hose gets very hot, heater shuts down and reset button trips	Adjust vaporizer out of flame. Move a small amount at a time and allow heater to equalize between adjustments. Also check fan inlet screen for plugging. If flame is very yellow it is due to lack of airflow to unit.

Notes

1996-1994 Gas Heaters

DELUXE HEATER WIRING

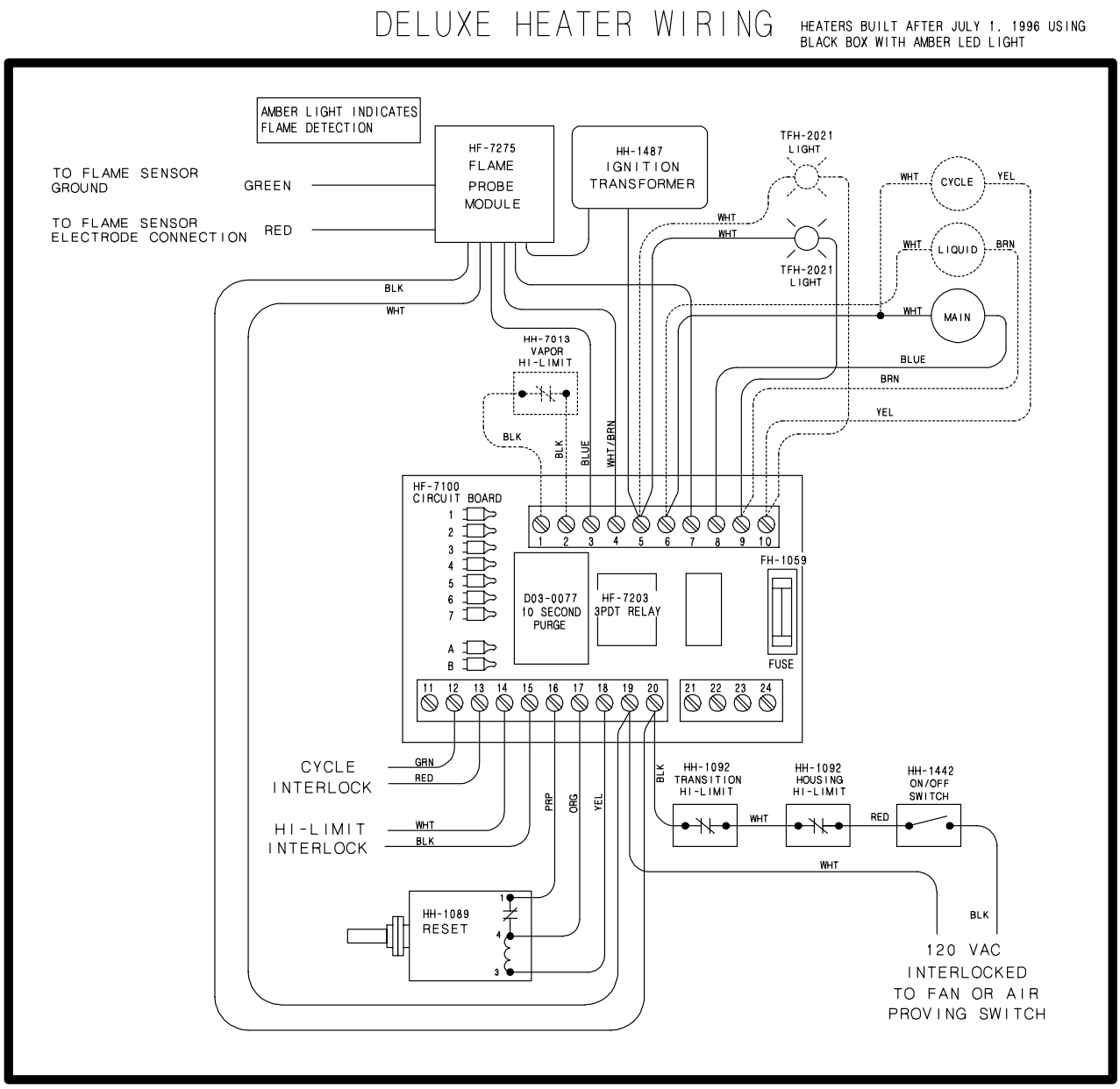

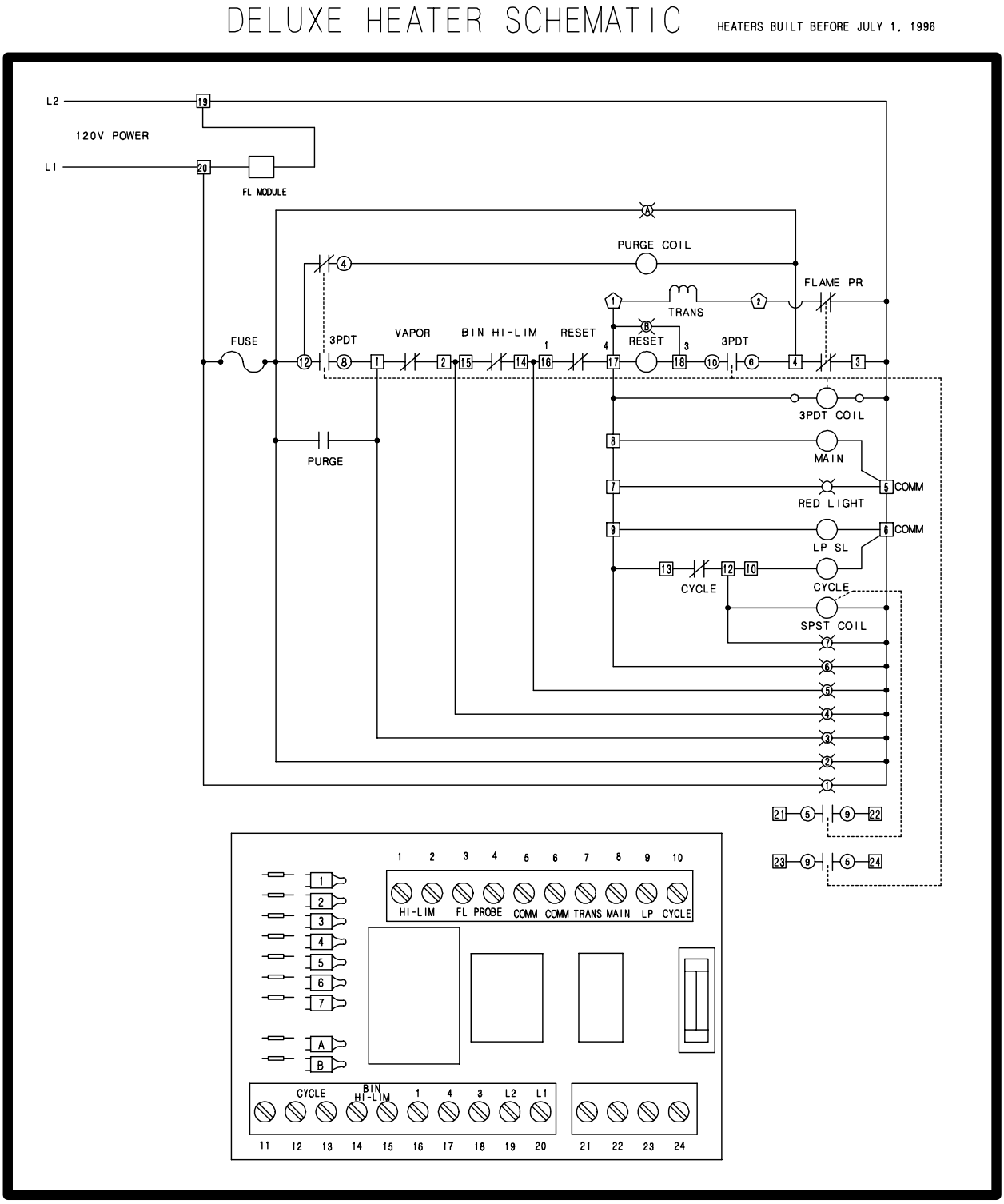
DELUXE HEATER SCHEMATIC
HEATERS BUILT BEFORE JULY 1, 1996
L2
120V POWER
L1
FL MODULE
PURGE COIL
FLAME PR
TRANS
FUSE
3PDT
VAPOR
BIN HI-LIM
RESET
RESET
3PDT
3PDT COIL
PURGE
MAIN
COMM
RED LIGHT
COMM
LP SL
CYCLE
CYCLE
SPST COIL
HI-LIM
FL PROBE
COMM
COMM
TRANS
MAIN
LP
CYCLE
CYCLE
BIN HI-LIM
L2
L1

1993-1995 Heaters

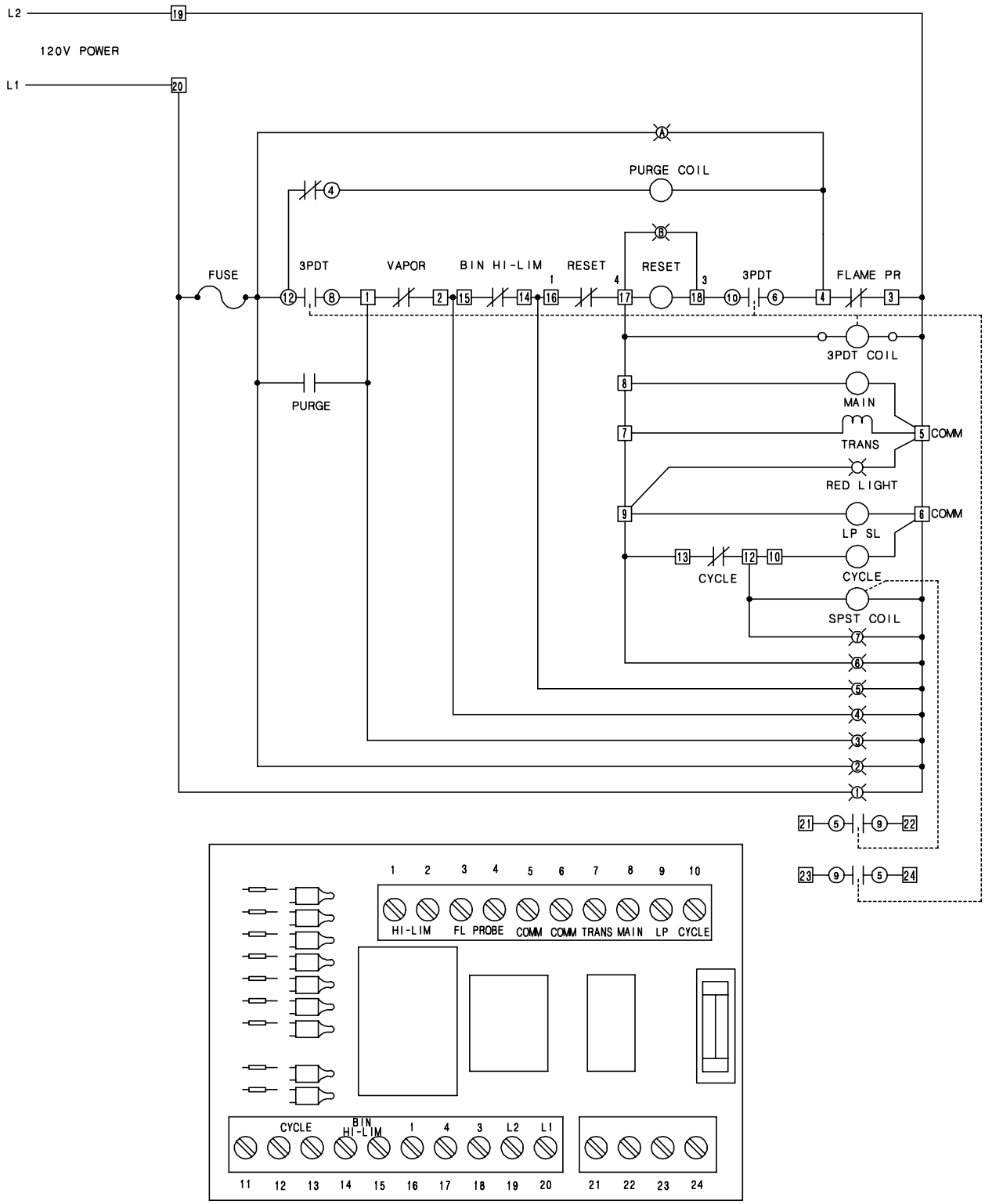

2ND HEATER INSTALLATION

For Units using HF-7100 Control Board
Manufactured after September 1. 1993

2nd Heater Control is Available with the HF-7100 heater control board. For Standard units no extra parts are required. For HI-LO units (1) TD-100282 Relay must be installed. INSTALLATION SHOULD BE MADE BY A QUALIFIED ELECTRICIAN. When points are called out in instructions they are in reference to points on drawing below text.

Installation (Standard Units)

1. Run (2) wires from Main Heater (Heater that thermostat is connected to) to 2nd Heater.
2. Connect 2 wires to terminals 3 and 4 (Points B and A) of 2nd heater control terminal strip in Main heater.
3. Connect other end of these wires to terminals 4 and 5 (Points F and E) on lower left hand corner of HF-7100 board in 2nd heater.

Installation (HI-LO Units)

1. Plug (1) TD-100282 Relay into empty socket on HF-7100 Control board in Main Heater.
2. Run (4) wires from Main Heater (Heater that thermostat is connected to) to 2nd Heater.
3. Connect 2 of the wires to terminals 3 and 4 (Points B and A) of 2nd Heater control terminal strip in Main heater.
4. Connect other end of these wires to terminals 4 and 5 (Points F and E) on lower left hand corner of HF-7100 board in 2nd heater.
5. Connect other 2 wires to terminals 1 and 2 (Points D and C) of 2nd heater control terminal strip in Main heater.
6. Connect other end of these wires to terminals 2 and 3 (Points Hand G) on lower left hand corner of HF-7100 board in 2nd heater.

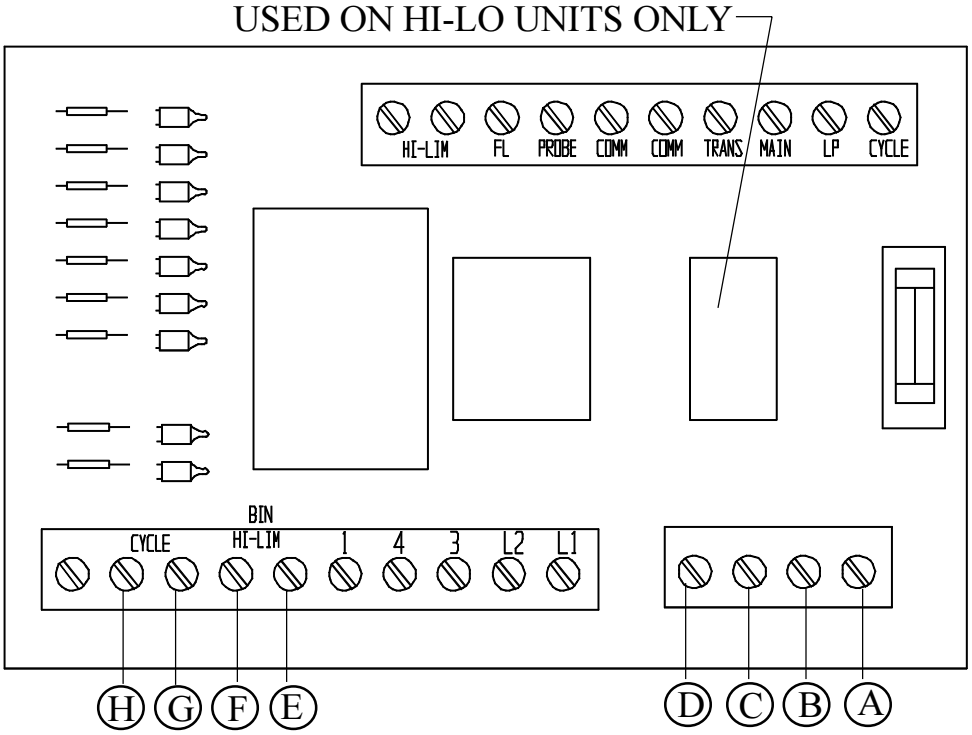

SMART BOARD

"SMART BOARD" is the name of the new printed circuit board in your heater. The purpose of this new board is to simplify the procedure for checking out the heater in case of a malfunction. "SMART BOARD" uses a series of lights to check for power at various locations in the heater circuit. Lights that are lit have power going to those components or locations, lights that are not lit indicate a lack of power at the terminal or location. During the operation of the heater, some check points should have power and some should not have power. The lights are numbered (1 through 7, A and B). Following is information to help identify which lights should be lit, what problem may exist and explain the operation of the SMART BOARD.

If a problem should occur, by following the instructions, the reason a heater does not maintain flame should be easily determined. As with any trouble-shooting, do not put ANYTHING inside the electrical box when the unit has power supplied to it. Be sure power is disconnected at the breaker before servicing.

If the heater unit does not operate properly, remove the electrical box cover and look at the Auto-Check board. By looking at the lights on the board, the problem should be easily identified. With the on-off switch on, determine which lights are lit and which are not.

Standard Heaters (not HI-LO fire):

When standard heater units are first turned on the and the purge time is completed (10 seconds), auto-check lights #1 through #6, A and B should be lit. When flame is established A and B will drop out. Light #7 is used only on HI-LO fire units and does not function on standard units.

HI-LO Fire Heater

On HI-LO fire units, all of the light sequences are the same as on standard units, except light #7 will be lit on high flame, and goes out when switching to low flame.

When the plenum chamber reaches the preset temperature of the humidistat-thermostat, lights 1 and 2 will be lit all other lights will be out. Once the flame goes out, light A will be lit and after the purge delay, lights 3 and 4 will be lit also. When the plenum chamber cools to the point of requiring more heat, lights 5 and 6 will be lit again. The cycle should continue until the unit is shut off.

The information below lists the light number(s) and what they indicate. Follow the chart down to the appropriate condition the unit is in, then read across to the explanation. Once the problem has been identified, you can proceed to fix the problem.

NOTE: Remove power and inspect all electrical connections before any other troubleshooting. If any connections are loose, tighten them and retry operation.

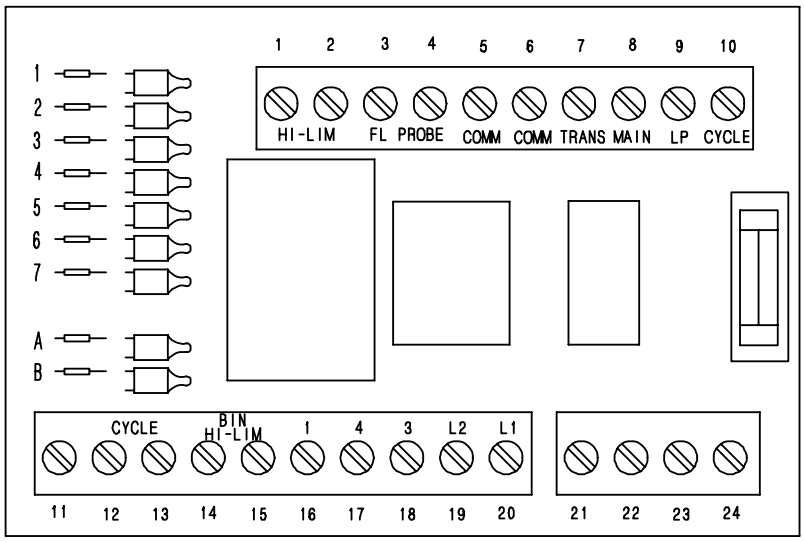

Light Identification

Light 1 Signifies the on/off switch is on and the heater hi-limit is good.

Light 2 Signifies the fuse is good.

Light 3 Signifies the 10 second time delay relay and/or the DPDT relay is energized.

Light 4 Signifies the vapor hi-limit is closed, or set, not tripped out.

Light 5 Signifies the humidistat-thermostat is calling for heat.

Light 6 Signifies the DPDT relay, vapor solenoid, liquid solenoid, ignition transformer and indication light are receiving power.

Light 7 Signifies the cycle thermostat is closed and the cycle solenoid is receiving power.

Light A Signifies the flame probe is closed.

Light B Signifies the DPDT relay is energized and the time delay reset is receiving power.

Troubleshooting Chart

Light #	Description
0	If no light is on, first check the on/off switch to be sure it is in the on position. If the unit still does not operate, check the heater hi-limit.
1	If light #1 is the only one lit, check the fuse on the SMART BOARD. If faulty, replace.
1 and 2	If only lights 1 and 2 are lit, check your connections to the flame detection module. (blue/black and white/brown wires). If connection is good replace flame detection module.
1,2 and A	If onlylights 1,2 and A are lit, check the 10 second purge relay and/or the DPDT relay. Replace either part if faulty and restart unit.
1,2,3 and A	If only lights 1,2,3 and A re lit the vapor hi-limit has shut down the unit. If the unit has been operating and just shut down, allow time for the vapor high limit to cool down (2 or 3 minutes). The vapor hi-limit will automatically reset itself. Then, readjust the vaporizer to a cooler position and the unit will restart itself. If it will not restart check and/or replace vapor hi-limit.
1,2,3,4 and A	If only lights 1,2,3,4 and A are lit, the humidistat thermostat or other heater control device has shut down the unit. Allos time for thermostat to cool and if unit does norestart check and/or replace control device.
1-5 and A	If only lights 1-5 and A are lit the time delay reset has shut down the unit. Reset the delay and restart the unit. If the delay connot be reset then replace. (If reset keeps kicking out flame sensor may be bad or need to be adjusted into the flame).
1-6, A and B	Check to see that spark plug is giving good blue sparkplug is giving good blue spark. If spark plug is not sparking check transformer, spark plug and spark plug wire. If unit does have good spark check to be sure that gas supply is on.

For Heaters Manufactured after 1988

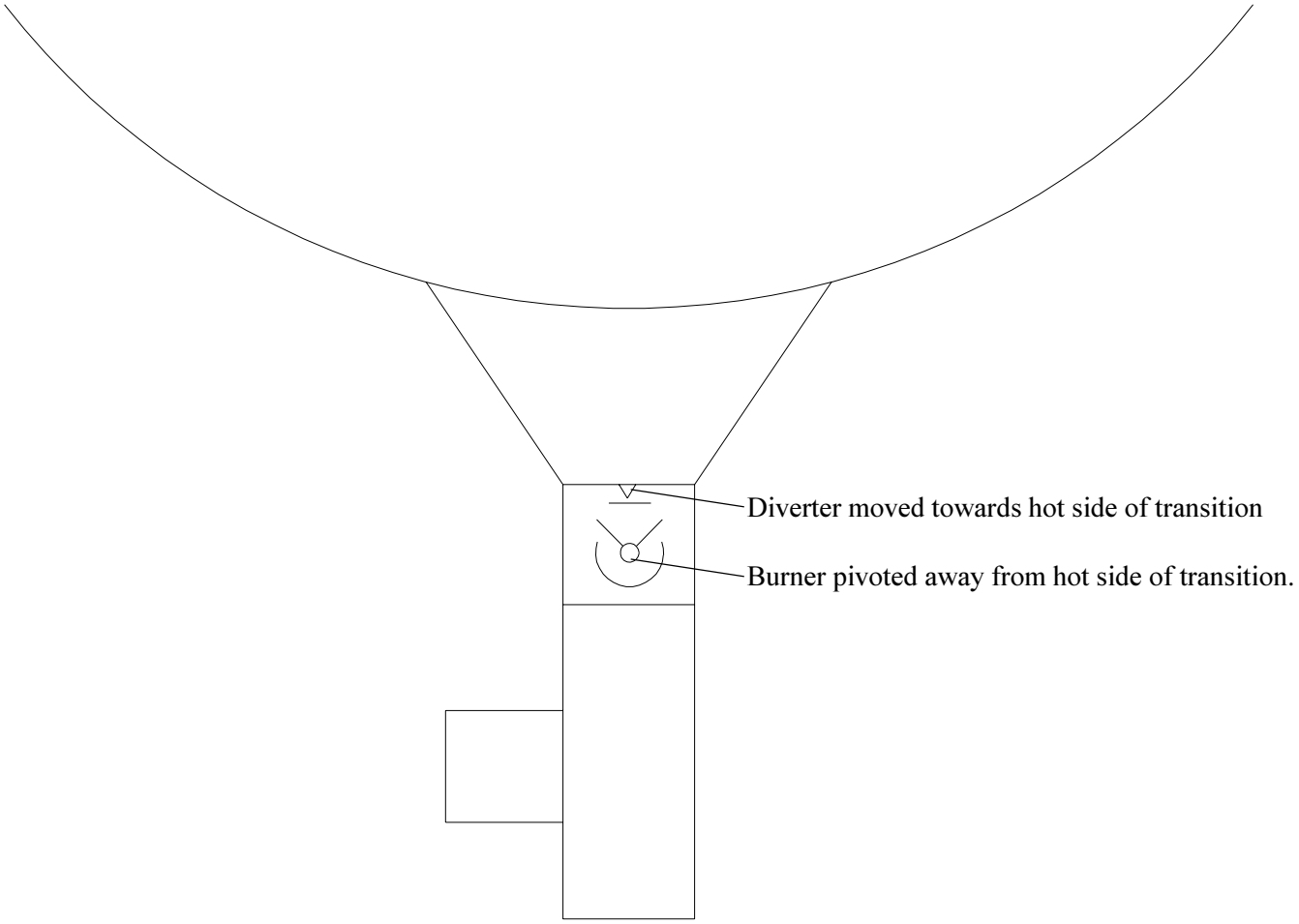

Notes:

Move Burner and diverter in very small increments and allow bin time to even out.

Always try pivoting burner first, this works great for minor adjustments.

Thermostat should always be mounted on right side of transition (looking into bin) as this is normally the warmer side of the bin.

1991-1993 GAS HEATERS

2ND HEATER INSTALLATION

For Units using HF-7100 Control Board

2nd Heater Control is Available with the HF-7100 heater control board. For Standard units (1) TD-100282 Relay must be installed. For HI-LO units (2) TD-100282 Relay and (1) TD-100283 Relay base must be installed. INSTALLATION SHOULD BE MADE BY A QUALIFIED ELECTRICIAN. When points are called out in instructions they are in reference to points on drawing below text.

Installation (Standard Units)

1. Plug (1) TD-100282 Relay into empty socket on HF-7100 Control Board in Main Heater.
2. Run (2) wires from main heater (heater that thermostat is connected to) to 2nd heater.
3. Connect 2 wires to terminals 1 and 2 (Points C and D) of 2nd heater control terminal strip in Main heater.
4. Connect other end of these wires to terminals 4 and 5 (Points F and E) on lower left hand corner of HF-7100 board in 2nd heater.

Installation (HI-LO Units)

1. Plug (1) TD-100282 Relay into empty socket on HF-7100 Control board in Main heater.
2. Install TD-100283 Relay base in main heater.
3. Run 1 wire from CYCLE (Point A) to terminal 13 on Relay Base. Run 1 wire from COMM (Point B) to terminal 14 on relay base.
4. Run (4) wires from Main Heater (Heater that thermostat is connected to) to 2nd Heater.
5. Connect 2 of the wires to terminals 9 and 5 of TD-100283 Relay base in main heater.

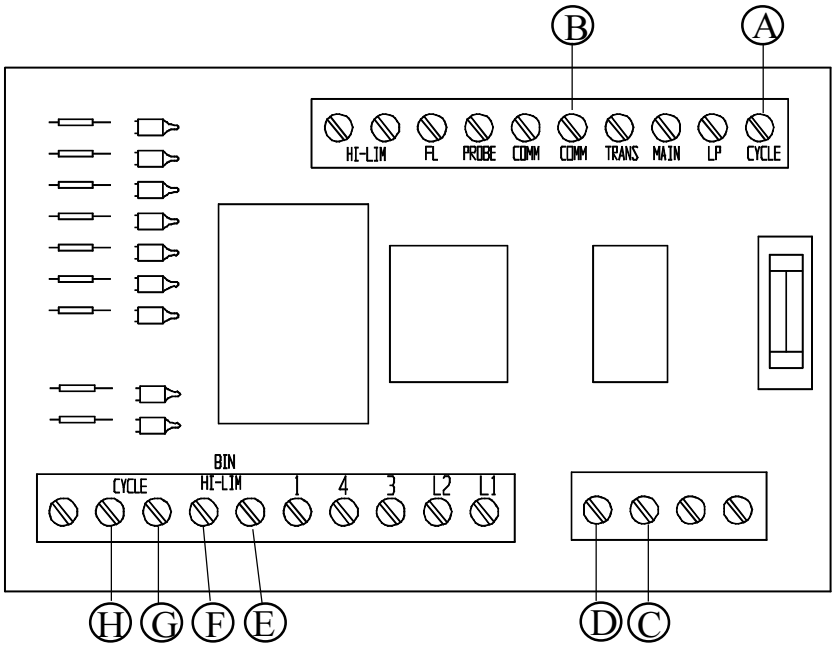

6. Connect other end of these wires to terminals 2 and 3 (Points G and H) on lower left hand corner of HF-7100 board in 2nd heater.
7. Connect other 2 wires to terminals 1 and 2 (Points D and C) of 2nd heater control termi nal strip in Main heater.
8. Connect other end of these wires to terminals 4 and 5 (Points E and F) on lower left hand corner of HF-7100 board in 2nd heater.
9. Install TD-100282 Relay into TD-100283 Relay base in main heater.

1991-1992 Heaters

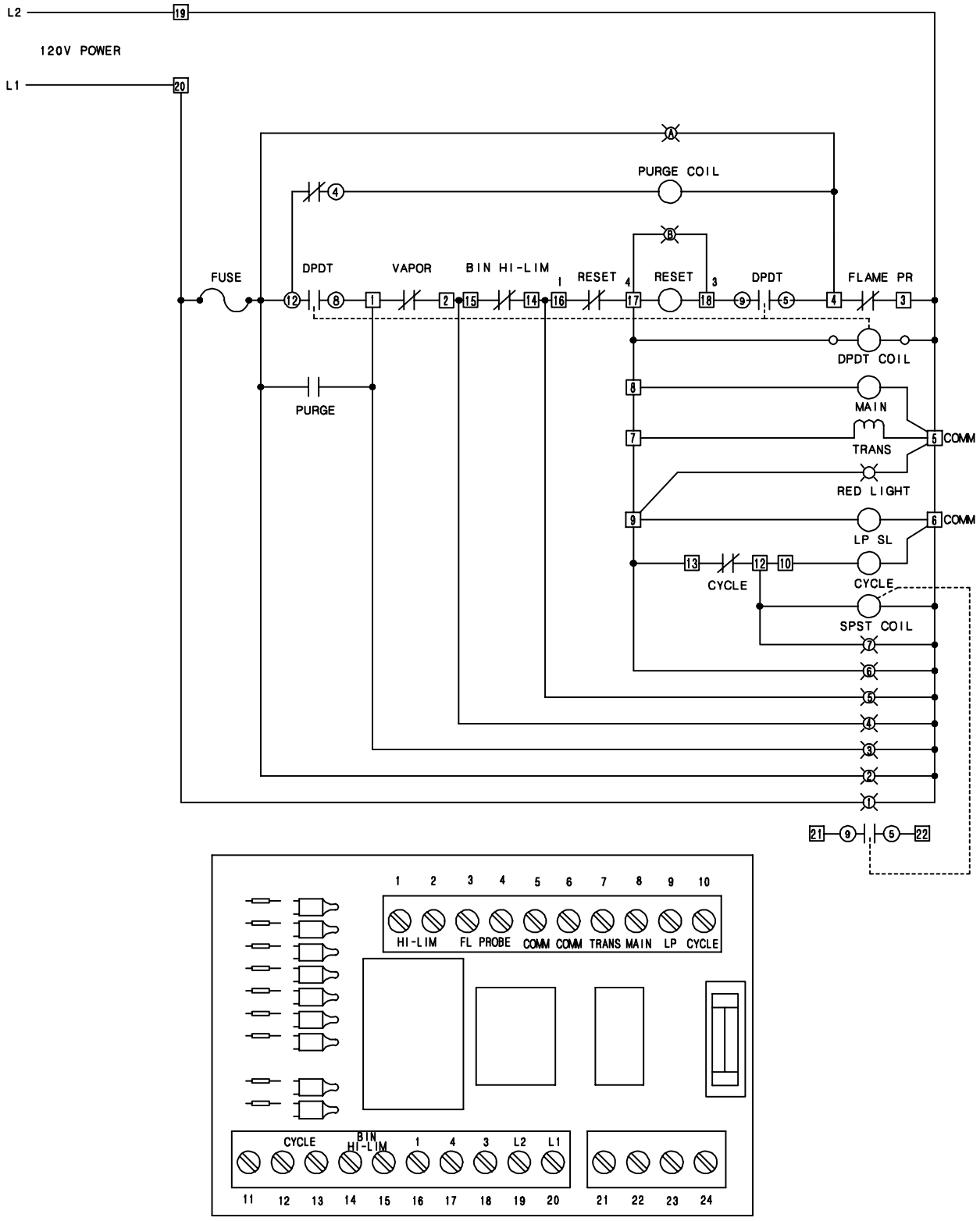

1990 GAS HEATERS

For Units Using HF-7062 Control Board

All troubleshooting should be done with GAS SHUT OFF AT TANK. It is recommended to run drop cord from 110 volt power source to test electrical system on heater. However NEVER RUN HEATER WITHOUT IT BEING ELECTRICALLY INTERLOCKED TO FAN. This may cause unit to be severely damaged in case of fan failure.
Before checking out any of the components on the HF-7062 heater controller board check to make sure that there is power to the board. Turn on/off switch to on position, check voltage between terminals L1 to L2 on the board there should be 110 volts present. If no voltage present check to make sure Heater housing high-limit is reset. If housing high-limit is reset check it and the on/off toggle switch to see if they are defective. If they check out OK then check to be sure that the unit has a good neutral. All tests below should be done with power on and on/off switch in on position.

Purge Delay

Turn on/off switch to on position. There should be 110 volts between points A and B on board. If no voltage present check out flame probe. If 110 volts are present wait 15 seconds and check voltage between points C and D on board if no voltage present purge relay is possibly defective.

Flame Probe

Flame probe should be closed when cool and open when warm. FLAME PROBE MUST BE COOL (CLOSED) FOR UNIT TO START. Check voltage between points A and B. If 110 volts is present then flame probe is probably OK. If no voltage present check between points B and C. If 110 volts present flame probe is defective. If no voltage is present check bin high limit.

Bin High-Limit

THERMOSTAT MUST BE PLUGGED IN AND CALLING FOR HEAT FOR UNIT TO START. Check voltage between points B and E. If 110 volts present then vapor high-limit should be OK. If no voltage present check between points F and B. If 110 volts present check out thermostat circuit. If no voltage present check out vapor high-limit and housing high-limit.

Vapor High-Limit (Liquid units only)

VAPOR HIGH-LIMIT RESETS AUTOMATICALLY. It must be cool to be closed. Check voltage between points G and B on Board. If voltage is present then vapor high-limit should be OK. If no voltage present check between points H and B. If voltage present then vapor high-limit is probably defective. If no voltage present check for bad connections on board or lack of a good neutral line coming into heater.

Time Delay Reset

CHECK TO BE SURE TIME DELAY RESET IS PUSHED IN (RESET CONDITION). Check voltage between points I and J. If 110 volts present then time delay reset should be OK. If no voltage present check voltage between points I and D. If 110 volts are present then time delay reset is probably defective. If no voltage present the check housing hi-limit or on/off switch.

IMPORTANT: After approximately 60 seconds of heater operation with gas shut off reset button should kick out. If it does not then check out flame probe.

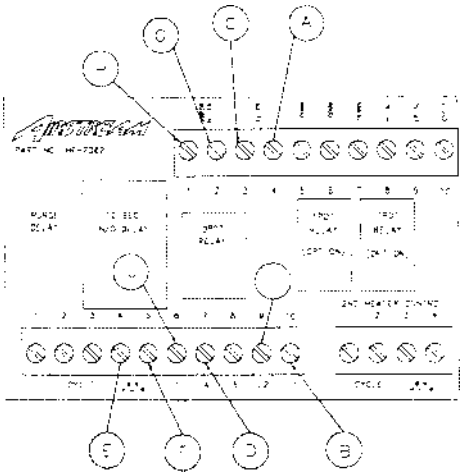

2ND HEATER INSTALLATION

For Units using HF-7062 Control Board

2nd Heater Control is Available with the HF-7062 heater control board. For Standard units (1) TD-100282 Relay must be installed. For HI-LO units (2) TD-100282 Relay must be installed. INSTALLATION SHOULD BE MADE BY A QUALIFIED ELECTRICIAN. When points are called out in instructions they are in reference to points on drawing below text.

Installation (Standard Units)

1. Plug TD-100282 Relay into left 1 pole relay socket on HF-7062 Control Board (This is the socket closest to the 2PDT relay on board See Drawing point I
2. Run (2) wires from main heater (heater that TD-1000282 Relay was installed in) to 2nd heater.
3. Connect wires to terminals 3 and 4 (Points A and B) of 2nd heater control terminal strip in Main heater.
4. Connect wires to terminals 4 and 5 (points E and F) on lower left hand corner of HF-7062 board in 2nd heater or install 2 prong plug on wires and plug into front of control box in receptacle marked CYCLE.

Installation (HI-LO Units)

1. Plug (2) TD-100282 Relay into empty sockets on HF-7062 Control board in Main Heater.
2. Run (4) wires from Main Heater (Heater that TD-100282 Relay were installed in) to 2nd Heater.
3. Connect 2 of the wires to terminals 1 and 2 (Points C and D) of 2nd Heater control terminal strip in main heater.
4. Connect other end of these wires to terminals 2 and 3 (Points G and H) on lower left hand corner of HF-7062 board in 2nd heater or install 2 prong plug on wires and plug into front of control box in receptacle marked CYCLE.
5. Connect other 2 wires to terminals 3 and 4 (Points A and B) of 2nd heater control terminal strip in Main heater.
6. Connect other end of these wires to terminals 4 and 5 (Points F and G) on lower left hand corner of HF-7062 board in 2nd heater or install 2 prong plug on wires and plug into front of control box in receptacle marked HI-LIMIT.

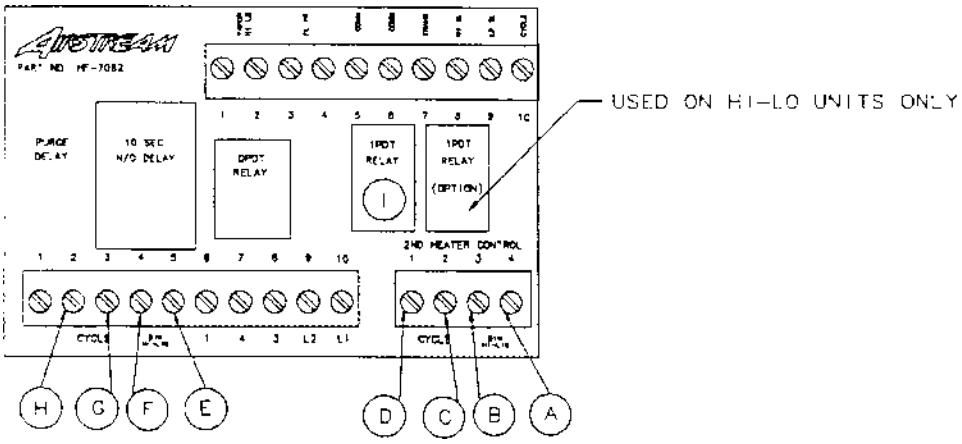

PRE-1990 GAS HEATERS

HEATER WIRING DIAGRAM

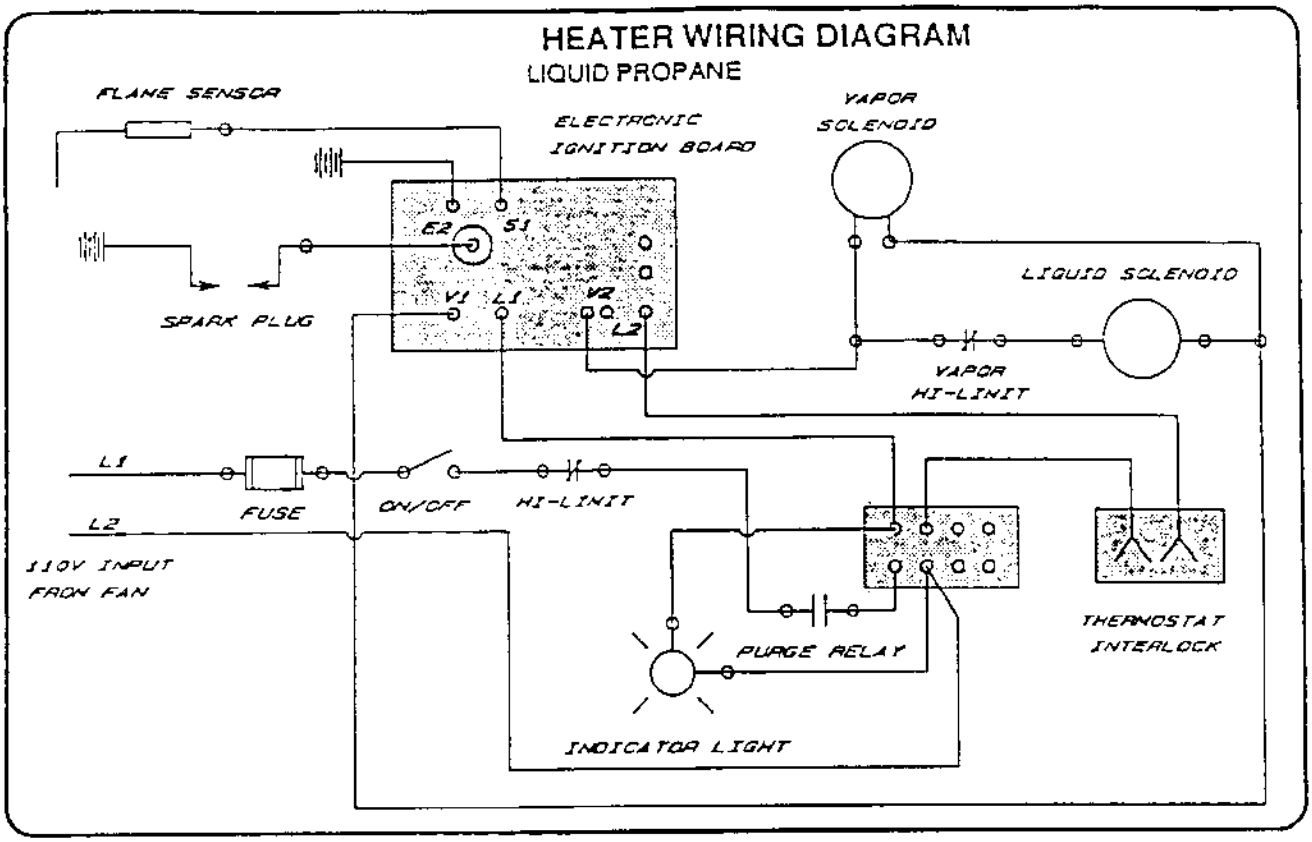

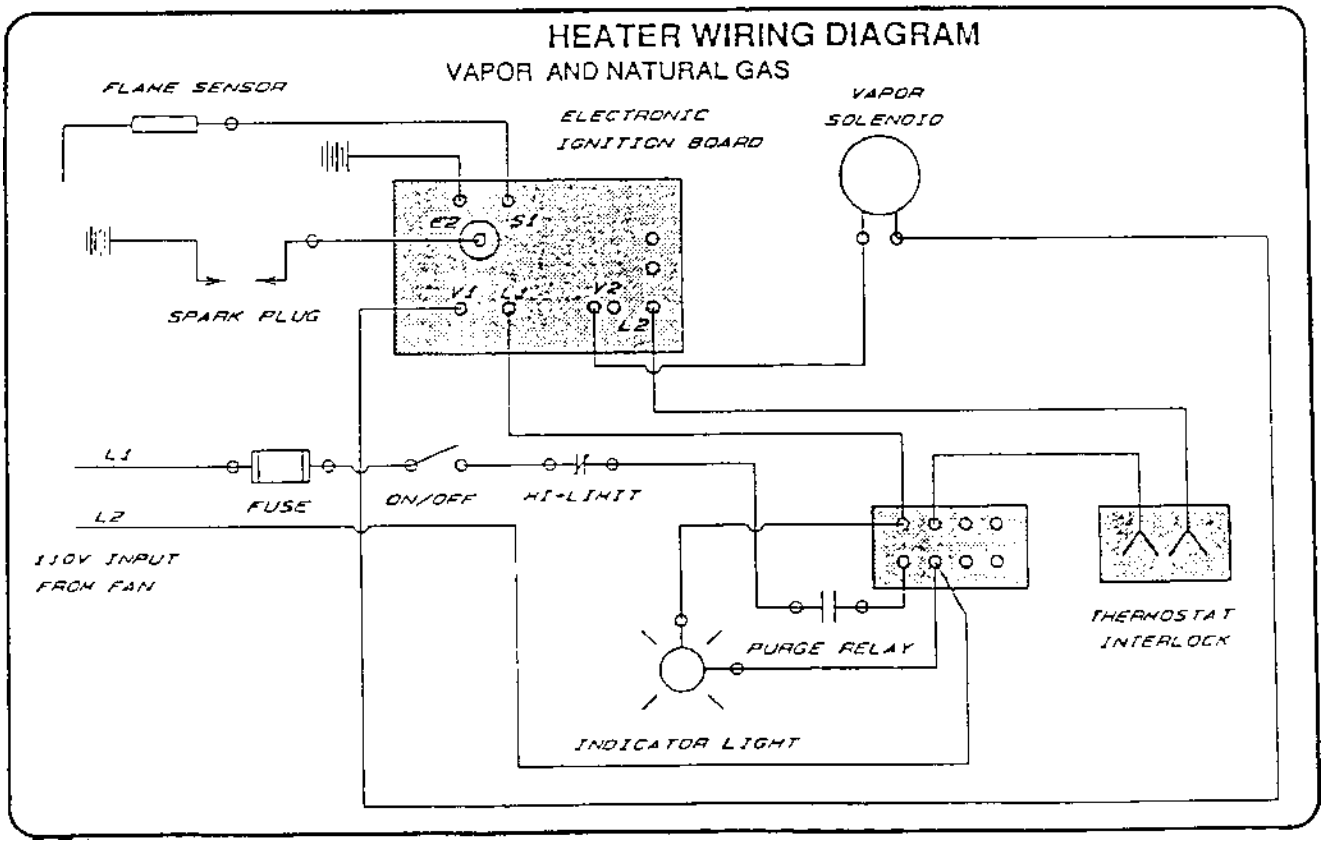

Vane Axial LP Heater

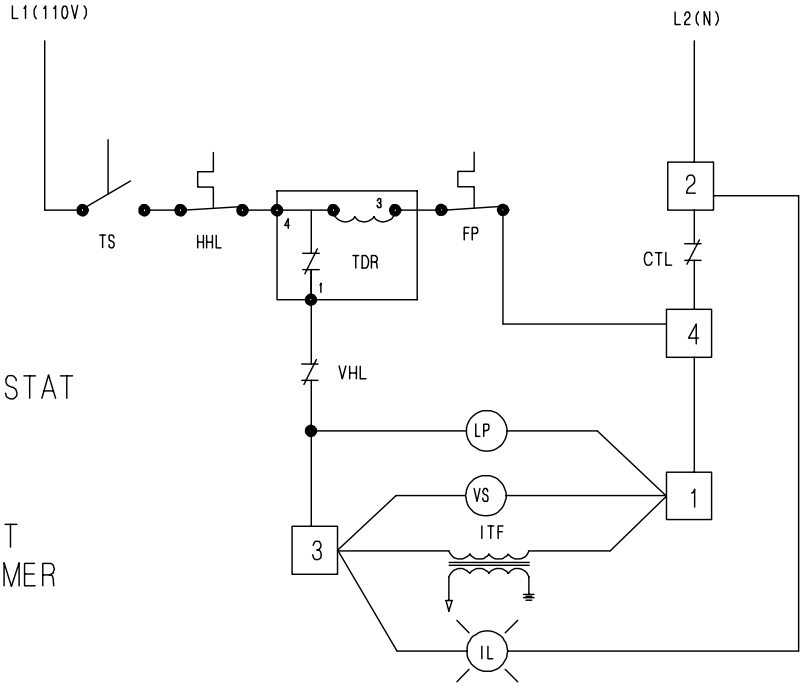

FP	FLAME PROBE
CTL	THERMOSTAT/HUMIDISTAT
TDR	TIME DELAY RESET
IL	INDICATOR LAMP
TS	TOGGLE SWITCH
HHL	HOUSING HIGH LIMIT
ITF	IGNITION TRANSFORMER
VS	VAPOR SOLENOID
LP	LIQUID SOLENOID
VHL	VAPOR HIGH LIMIT
3	TERMINAL STRIP TERMINAL

Vane Axial Vapor Heater

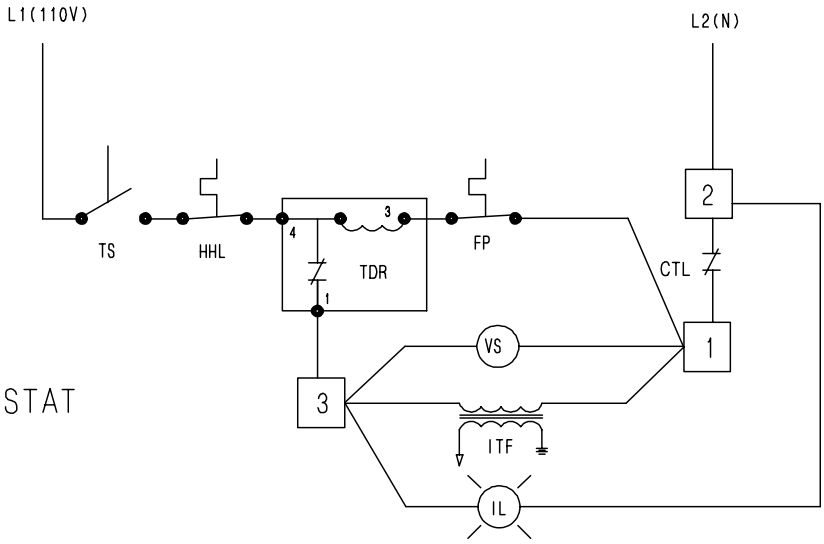

FP	FLAME PROBE
CTL	THERMOSTAT/HUMIDISTAT
TDR	TIME DELAY RESET
IL	INDICATOR LAMP
TS	TOGGLE SWITCH
HHL	HOUSING HIGH LIMIT
ITF	IGNITION TRANSFORMER
VS	VAPOR SOLENOID
3	TERMINAL STRIP TERMINAL

Downwind LP Heater

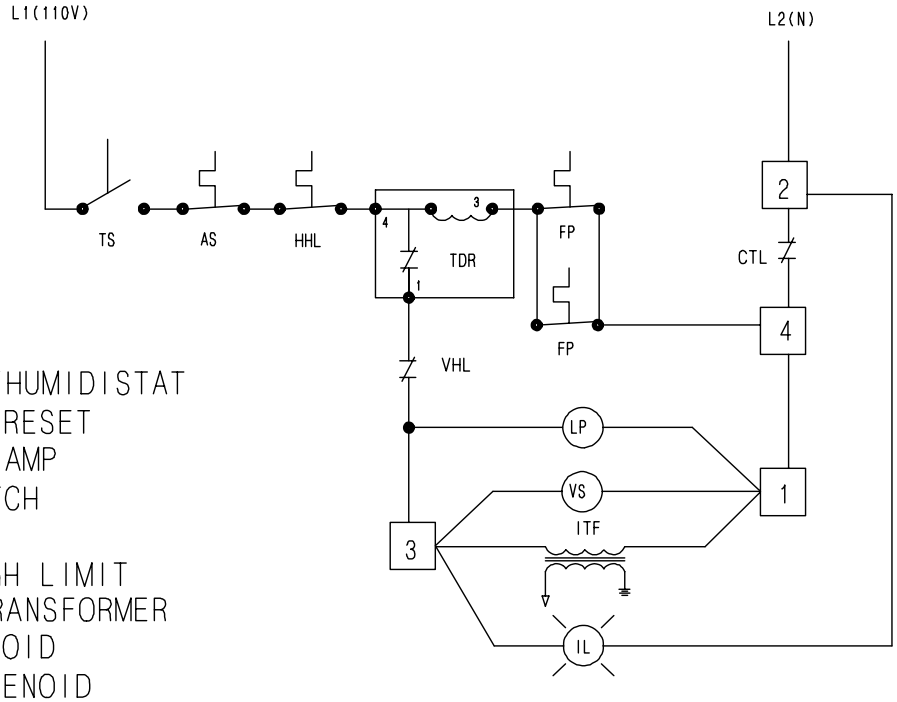

FP	FLAME PROBE
CTL	THERMOSTAT/HUMIDISTAT
TDR	TIME DELAY RESET
IL	INDICATOR LAMP
TS	TOGGLE SWITCH
AS	AIR SWITCH
HHL	HOUSING HIGH LIMIT
ITF	IGNITION TRANSFORMER
VS	VAPOR SOLENOID
LP	LIQUID SOLENOID
VHL	VAPOR HIGH LIMIT
3	TERMINAL STRIP TERMINAL

Downwind Vapor Heater

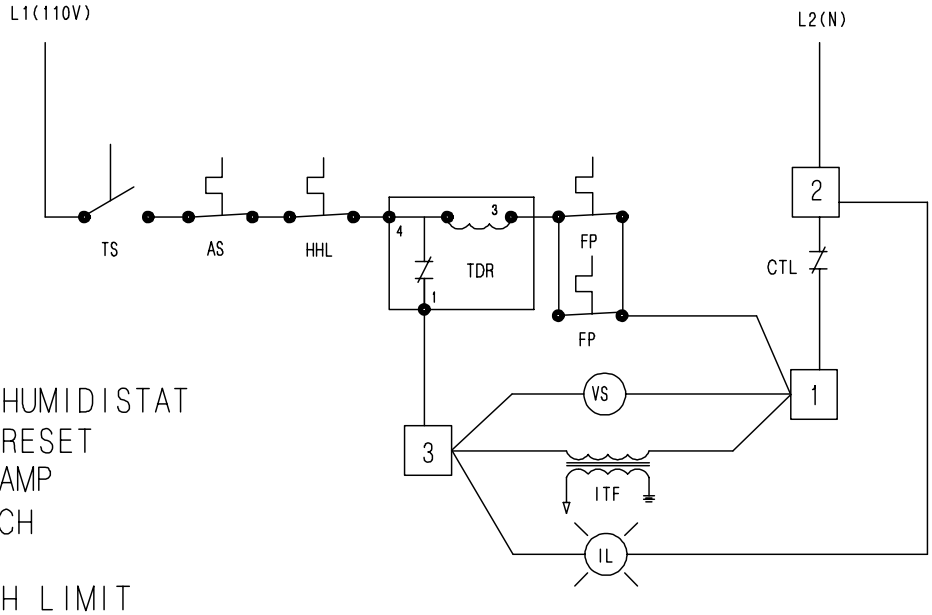

FP	FLAME PROBE
CTL	THERMOSTAT/HUMIDISTAT
TDR	TIME DELAY RESET
IL	INDICATOR LAMP
TS	TOGGLE SWITCH
AS	AIR SWITCH
HHL	HOUSING HIGH LIMIT
ITF	IGNITION TRANSFORMER
VS	VAPOR SOLENOID
[3]	TERMINAL STRIP TERMINAL

Lo-Fire Downwind Heater

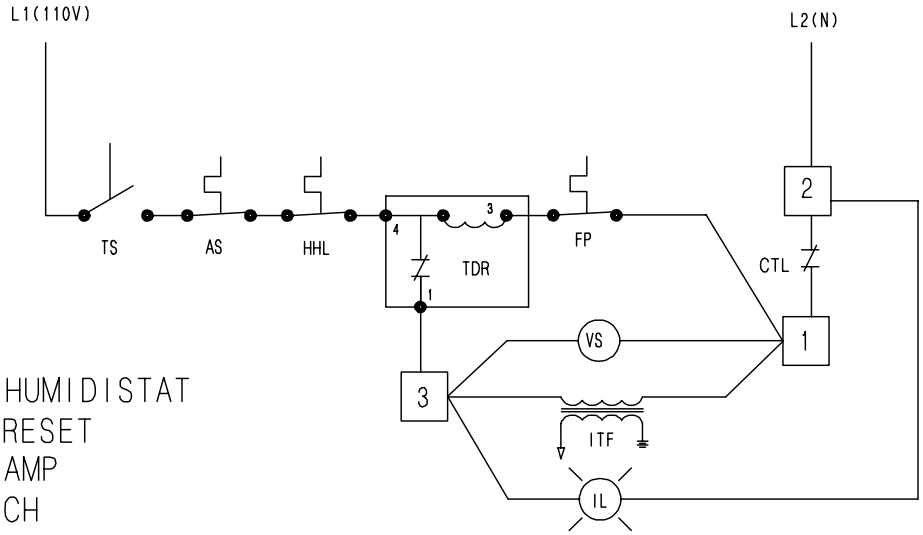

FP	FLAME PROBE
CTL	THERMOSTAT/HUMIDISTAT
TDR	TIME DELAY RESET
IL	INDICATOR LAMP
TS	TOGGLE SWITCH
AS	AIR SWITCH
HHL	HOUSING HIGH LIMIT
ITF	IGNITION TRANSFORMER
VS	VAPOR SOLENOID
3	TERMINAL STRIP TERMINAL

MISCELLANEOUS INFORMATION

1991-1993 PNEG-286

Flame Detector Kit Installation

Part Number HF-7136

1. Mount the detector module inside the heater control box. Module can be mounted in any position, but install so that moisture cannot get inside unit.

2. Run white wire to common or neutral of 120V power source.

3. Run black wire to terminal that is 110V when heater gets power. (Wire module power in parallel with ignition trans former or main solenoid if they are 110V.)

4. Run green and red wires down to sensing probe. Red wire should go to flame probe electrode and green wire should go to flame probe ground. For proper operation the ground wire should be connected as close to probe as possible.

5. The remaining three wires are the normally open or normally closed relay contacts that replace the mechanical flame probe. The blue-black wire is the common, the white-brown wire is the normally closed, and the white-blue is the normally open. On all Airstream heaters use the blue-black and the white-brown wires. The white-blue wire should be used only on makes of heaters that use a normally open probe.

6. Mount the sensing probe so the sensing portion will be in the flame at its highest and lowest operating conditions.

7. Inside the flame detector is a red neon light. This light should be on when flame is being sensed and will go out when flame out condition is detected.

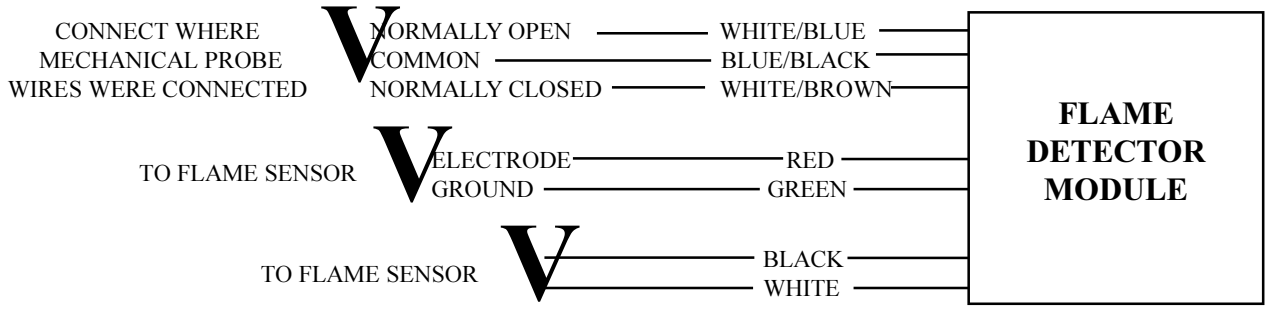

NOTE: IF PROBE DOES NOT SEEM TO SENSE FLAME AS IT SHOULD REVERSE THE RED AND GREEN WIRES AT THE PROBE. THIS MAY INCREASE SENSITIVITY OF PROBE ON CERTAIN MAKES OF HEATERS.

1994-1995 PNEG-286

Flame Detector Kit Installation

Part Number HF-7136

1. Mount the detector module inside the heater control box. Module can be mounted in any position, but install so that moisture cannot get inside unit.

2. Run white wire to common or neutral of 120V power source.

3. Run black wire to terminal that is 110V when heater gets power. (Wire module power in parallel with main solenoid if it is 110V.)

4. Run green and red wires down to sensing probe. Red wire should go to flame probe electrode and green wire should go to flame probe ground. For proper operation the ground wire should be connected as close to probe as possible.

5. The remaining three wires are the normally open or normally closed relay contacts that replace the mechanical flame probe. The blue-black wire is the common, the white-brown wire is the normally closed, and the white-blue is the normally open. On all Airstream heaters use the blue-black and the white-brown wires. The white-blue wire should be used only on makes of heaters that use a normally open probe.

6. 110 volt igniton transformer may be connected to (2) 1/4" male spade connectors. This will turn off igniton after flame is established.

7. Mount the sensing probe so the sensing portion will be in the flame at its highest and lowest operating conditions.

8. On the side of the flame detector is a red neon light. This light should be on when flame is being sensed and will go out when flame out condition is detected.

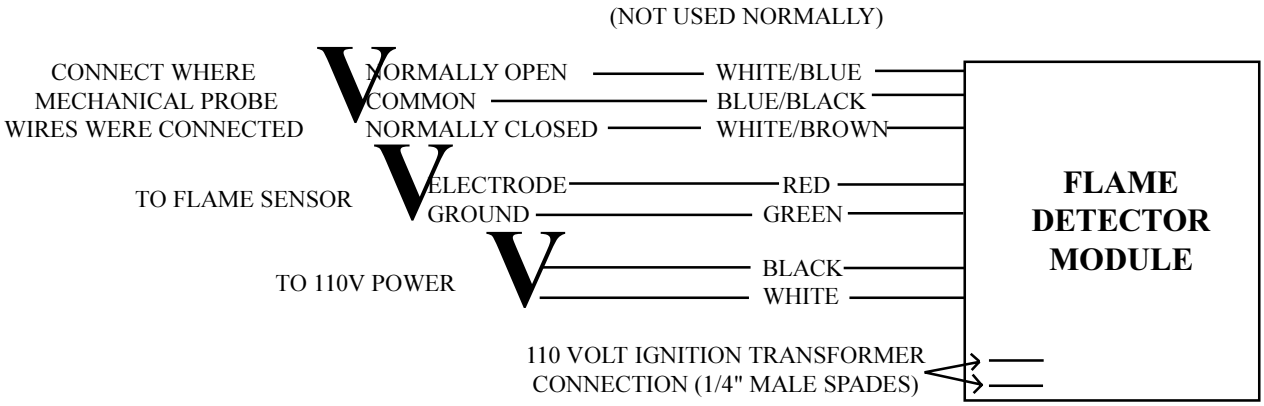

1996-PRESENT

PNEG-286

Flame Detector Kit Installation

Part Number HF-7136

1. Mount the detector module inside the heater control box. Module can be mounted in any position, but install so that moisture cannot get inside unit.

2. Run white wire to common or neutral of 120V power source.

3. Run black wire to terminal that is 110V when heater gets power. (Wire module power in parallel with main solenoid if it is 110V.)

4. Run green and red wires down to sensing probe. Red wire should go to flame probe electrode and green wire should go to flame probe ground. For proper operation the ground wire should be connected as close to probe as possible.

5. The remaining three wires are the normally open or normally closed relay contacts that replace the mechanical flame probe. The blue-black wire is the common, the white-brown wire is the normally closed, and the white-blue is the normally open. On all Airstream heaters use the blue-black and the white-brown wires. The white-blue wire should be used only on makes of heaters that use a normally open probe.

6. 110 volt ignition transformer may be connected to (2) 1/4" male spade connectors. This will turn off ignition after flame is established. **This step is not required for operation.**

7. Mount the sensing probe so the sensing portion will be in the flame at its highest and lowest operating conditions.

8. On the side of the flame detector is a red neon light. This light should be on when flame is being sensed and will go out when flame out condition is detected.

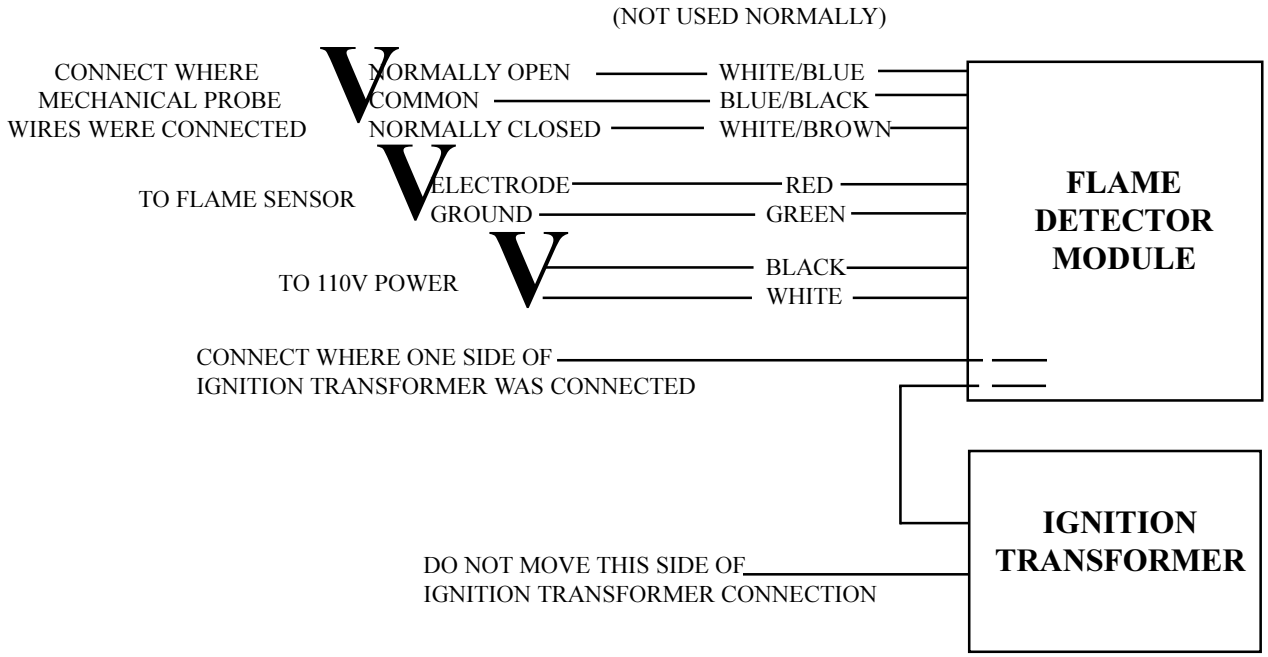

Johnson Controls, Inc.
Control Products Division
1302 East Monroe Street
Goshen, IN 46526

Series V50
Self-Operated Modulating Valves
For Outdoor Crop Dryer Service

Installation and Operation Instructions

Application

These valves control the flow of gas on natural or LP gas fired outdoor crop dryers to maintain desired drying air temperature. Changes in air temperature at the sensing bulb cause the valve to modulate the gas supply to the main burner.

CAUTION: Valves are for outdoor crop dryer service only. Not for use on applications of any other kind.

All Series V50 valves are designed for use only as operating devices. Where system closure, improper flow or loss of pressure due to valve failure can result in personal injury and/or loss of property, a separate pressure relief or safety shutoff valve, as applicable, must be added by the user.

Operation

LP Gas Application

These valves are normally located on the crop dryer gas manifold between the pressure regulating valve and the burner orifice. They are used on vapor withdrawal systems or on liquid withdrawal systems using a direct or indirect vaporizer. They should not be used as a expansion valves (handling liquid LP) on straight liquid withdrawal systems.

A pressure regulating valve is required to maintain uniform inlet pressure to the V50 modulating valve because the tank pressure varies considerably due to changes in tank ambient temperature.

The recommended setting for the pressure regulating valve is no higher than 30PSIG (207 kPa) as in many

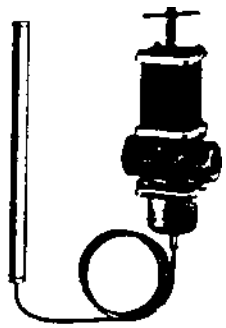

Figure 1
Modulating Value V50A

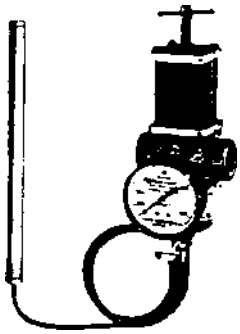

Figure 2
Modulating Value V50B

instances the outside temperature will not be high enough to provide the regulating valve with pressure above this value. The maximum working pressure for V50 self-operating valves is 30 PSIG.

As the modulating valve provides only a portion of the pressure drop, the maximum firing rate (valve wide open) is determined by the setting of the pressure regulator and the size of the burner orifice.

Installation

Follow original equipment manufacturer's installation instructions, if provided.

CAUTION: The valve should not be installed on lines where line pressure excedds 30 PSIG (207 kPa). When there is a possibility of pressures over 30 PSIG, provide an overpressure or alarm control. The temperature at the sensing bulb must not exceed maximum valve range shown on the nameplate by more than 20F° (10C°). The maximum ambient temperature around the valve body must nots exceed 175°F (79°C).

Installation and Operation Instructions, continued

Be sure the valve is installed so the gas flows through the body in the proper direction as indicated by the arrow on the body.

On direct or indirect fired vaporizer systems in which hot LP gas is flowing through the valve, install the valve with the bellows pointing down. This allows the temperature sensing element to perform properly. In vapor withdrawal systems, the gas flowing through the valve is cooler than the sensing bulb and valve is cooler thatn the sensing bulb and valve mounting position is not as important.

The temperature sensing bulb should be installed so the capillary end of the bulb is always higher than the plugged and of the bulb (see figure 3.)

If the installation requires that the bulb be in a horizontal position, it is very importanat to be sure that the word "TOP" appears at the top or uppermost surface of the bulb. (see Figure 4).

CAUTION: Do not kink or sharply bend the capillary tubing. Coil and secure excess capillary if installed where subjectd to vibration, allowing some slack in capillary to avoid "violin string" vibrations. Do not allow capillary to rub surfaces where friction can damage the tubing.

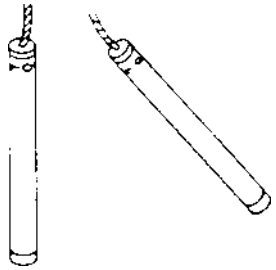

Figure 3-Capillary-end of bulb higher than plugged-end of temperature bulb.

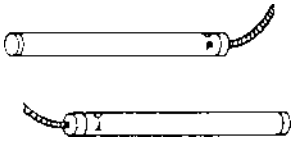

Figure 4-Horizontal bulb mounting with "TOP" at top or uppermost surface of bulb.

Bypass Orifice Selection

These valves have a threaded hole in the internal web of the valve for an internal bypass. (See figure 5) They are normally supplied with a solid plug installed in this hole for complete shutoff. Five drilled orifice fittings are supplied with each valve for field installation, if bypass is needed. The bypass orifice is ued to maintain a minimum flame which will burn even when the close-off point has been reached. When bypass is required, remove the solid plug and replace with the proper orifice plug. See selection table.

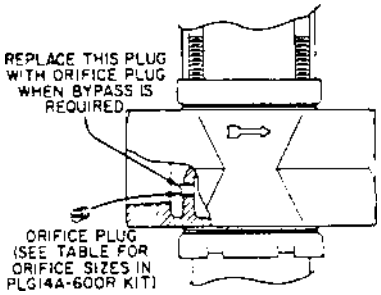

Figure 5-Cutaway view showing location of orifice plug

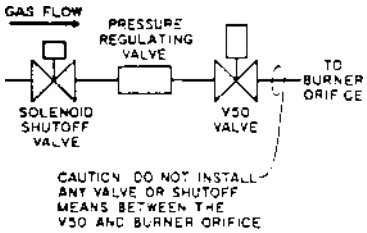

Figure 6-Typical piping for the V50 Valve

Orifice Sizes in Kit Number PLG14A-600R		
Orifice Size In.	mm	Color Code
.040	1.02	Red
.062	1.57	Yellow
.078	1.98	Green
.093	2.36	Blue
.125	3.18	Aluminum
Solid Plug		Brass

Adjustment

Adjust the valve close-off point by turning the "T" handle on top of the range spring housing.

When the handle is turned in (clockwise) a high bulb temperature is required to close the valve. Turn the handle ou (counterclockwise) when a lower temperature is desired.

The operator can set the valve to be fully closed at any temperature within its range. The gage on the V50B valves is an integral lpart of the temperature sensing element and helps the operator make accurate settings.

Checkout Procedure

Check for gas leaks with a soap solution at the piping connections and around valve gaskets.

Check for minimum fire stability-ifunstable use next larger orifice from kit PLG14A-600R.

Before leaving the installation, observe at least three complete operating cycles to be sure that all components are functioning correctly. Gas pressure through the valve should be verified by an accurate gage.

Repairs and Replacement

The internal parts, orifice plug, diaphargms and sensing elements may be replaced. Other field repairs must not be made. When ordering a replacement valve or sensing element, specify Product Number shown on valve. Replacement parts and valves may be obtained through the nearest Johnson Controls wholesaler.

CAUTION: Check all joints for leaks with a soap solution after valve has been repaired.

Replacement Parts

Valve Size	Valve Renewal Kit*	Diaphragm Kit	Orifice Plug Kit
1/2*	STT15A-604R	DPM16A-600R	PLG14A-600R
3/4*	STT16A-603R	DPM16A-601R	PLG14A-600R
1*	STT17A-614R	DPM16A-602R	PLG14A-600R
1 1/4*	STT17A-615R	DPM16A-602R	PLG14A-600R

***Includes deat, disc, diaphragms and all internal parts to reconditon valve.**

FENWAL

SERIES 05-14
Proof of Flame
Direct Spark Ignition System
U.S. Patent Nos. 3,504,992;3,832,123;3,847,533;3,861,854.
Can Patent No. 860,521

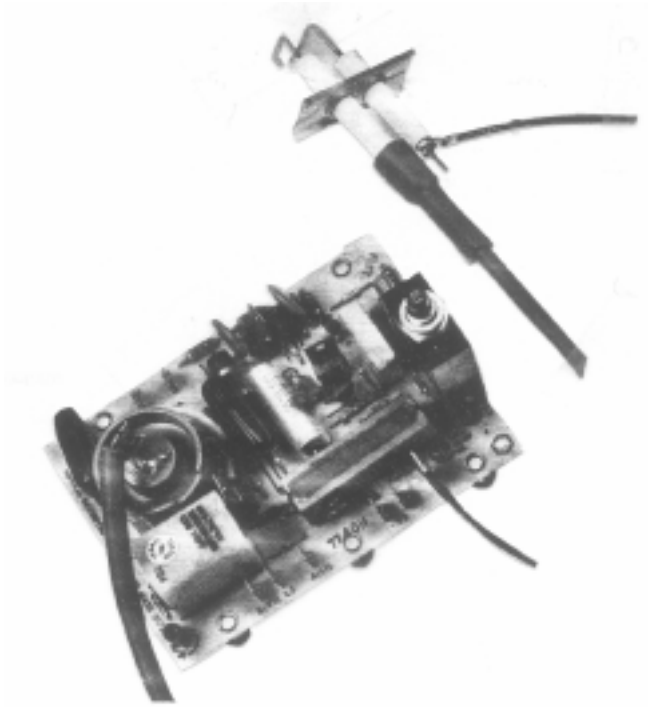

Installation Instructions

General Information

Fenwal Series 05-14 Spark Ignition Systems are manufactured and tested to the most rigid quality control standards. Strict adherence to these instructions will assure satisfactory performance.

WARNING: This ignition system complies with the Z21.20 ANSI Standards for gas burner automatic ignition systems when installed with Fenwal specified electrodes and high voltage lead wires. The replacement of components or any alterations to this control board will invalidate our warranty, void agency certifications and can create hazardous conditions that may cause property damage, personal injury or even death.

Operation

On a call for heat, input power is applied to control board, sparking is then initiated and the gas valve is energized. Sparking continues with the gas valve powered for a specified "trial-for-ignition" period. (See Specifications for timing periods.)

In normal operation, as soon as flame is established and proven by the flame sensing circuitry, sparking will cease immediately and the system will remain "on", monitoring the flame until the end of the duty cycle.

Should a flame-out occur during the duty cycle, the system will reactivate the spark with 0.8 seconds, to provide for re-ignition. The flame will either be re-established within the "trial-for-ignition" time, or the system will lock-out in the normal manner. Should lock-out occur, reset action (manual or thermostatic) must be taken before the unit can be recycled. Reset action may be accomplished at either the thermostat or at the control unit circuit breaker, depending on the model number of the unit. If the ignitor is a manual reset model (05-140X0X-00X), the circuit breaker will trip several seconds after sparking stops and the gas valve is deenergized. If the ignitor is designed for thermostatic reset, (05-1420X0X-00X), the circuit breaker will only trip after several attempts at re-ignition.

Thermostat Reset (Line Interruption)

Should the 05-14 series with the thermostat reset (models designated 05-142X01-0XX) go into lock-out due to loss of flame, the thermostat should be momentarily turned below set point or the control switch opened to initiate recycling. Lowering the thermostat below ambient will normally recycle the system. If several attempts at thermostatic reset do not result in ignition, a manual reset button on the ignitor module will actuate, preventing further recycling.

Manual Reset

The manual reset feature, available on models designated 05-140X01-00X requires manual resetting of the system in the event of lock-out.

Operation continued

This manual reset button can be located on the ignitor board or remotely on a control panel. (Consult factory for remove mounting agency approvals). Should the flame not be established during the trial for ignition period, the system will lock-out. Should flame-out occur any time during the duty cycle, the system will retry for ignition, one time, and then lock-out. The manual reset button will then trip within several seconds. After 5 second, depress the reset button to reset the control module.

Flame Sensing

The Series 05-14 ignitor is designed to operate with a single electrode assembly, which provides the spark and senses the presence of flame. See Figure 3 Aor B. Remote sensing models, however, allow for the flame sensing function to be separated from the spark function and located remotely. See Figure 3C or D. Utilization of remote sensing insures flame propagation across and entire burner pack.

Electrode Application
(Burner Manufacturer only)

1. Manually ignite burner flame to observe flame characteristics.

2. Temporarily mount electrode directly over burner parts in blue part of flame pattern. Electrode tips should be 1/4 to 1/2-inch above parts. Mount electrodes so that both tips are immersed approximately 1/2-inch into the flame with 1/8-inch spark gap directly over a port. See Figure 1.

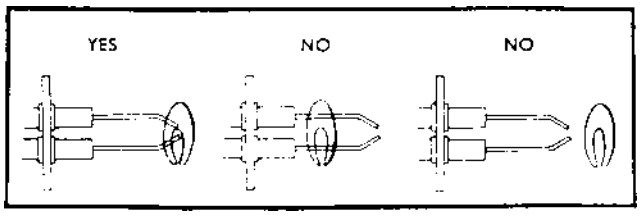

Figure 1

3. Connect the electrode lead wires to the control module. See Figure 3. Make certain that the remaining system wiring is complete.

4. With the gas supply m;anually shut off, cycle the thermostat to operate the control module. Insure that steady sparking occurs at electrode tips. Sparking should not occur elsewhere.

5. Cycle thermostat to OFF position or depress reset button and manually restore gas supply.

6. Cycle thermostat on ON position noting that sparking occurs immediately and that the flame is established within a period of no more than four seconds. Once the flame is established, sparking will cease.

7. If ignition is achieved within four seconds and sparking terminates immediately after flame is established, you have a functionaaly sound installation. However, should these requisites not be met, consult the "System Checks" section on page 4 for remedial recommendations.

NOTE: Electrode assemblies are presision components and should not be adjusted or disassembled. Electrodes should have a gap spacing of 0.125"=0.031". If this spacing is not correct, return the electrode assembly to the factory for replacement. Electrodes are NOT field adjustable.

Specifications

Control Board	Comments
05-14X201-00X:	120VAC valve relay, local sensing
05-14X301-00X:	Isolated valve contacts, local sensing
05-14X401-00X:	120VAC valve relay, remote sensing
05-14X501-00X:	Isolated valve contacts, remote sensing

X (Fifth Digit) 0=Manual Reset
2=Thermostat Reset

Input Voltage: 120VAC, 60Hz, nominal
Current Drain: 50mA (175mA to 250mA momentarily during ignition).
Ambient: -40°F to 140°F, operating

continued to page 72

Control Board **Comments**

Gas Valve Relay
Current Ratings:

A) 05-14X201-00X Common relay output
05-14X401-00X 120VAC 1 amp
B) 05-14X301-00X Isolated valve contacts
05-14X501-00X 1) 24VAC 2amps
2) 120VAC 1amps
3) 240VAC 0.5amps

Timing
(Trial -for-Ignition)
-000: 3.3 seconds
-001: 4.7 seconds
-005: 10 seconds

Electrodes
05-100000-XXX*: Gap 0.125" = 0.031"
or
22-100000-XXX*:
*Last three digits designate configuration
Lead Wire
05-125978-0XX**: High Voltage
05-125979-0XX**: Low Voltage

CAUTION: If ambient temperature ratings are exceeded, damage to the unit and/or improper operation may result.
** Last Two digits designate length of wire in inches. EX: -024 = 24 inches. When ordering, specify length required.

Wiring

IMPORTANT: The model number of each Fenwal Spark Ignition Module is stamped on a lable attached to the high voltage transformer. Select the electrical ciruit diagram in Figure 3 which matches the model number on the high voltage transformer and wire the unit accordingly.

NOTE: The burner and the 120V suppy (NEUT-L2) must be grounded to obtain satisfactory operation. Failure to do so will prevent ignition from lasting beyond the trial for ignition period.

Fenwal Gas Ignitors are provded with 1/4" male quick connect terminals (ARK-LES Part No. 300 H19A or recommended equivalent should be used for all connections.) When making connections, be sure they conform to both U.L. and local codes.

NOTE: High voltage lead wire should be routed at least 1 inch from metal piping or metal frames. Do not wrap or bundle any wires with or against the high-voltage lead wire.

CAUTION: HIGH VOLTAGE

NOTE: Although epoxy coated to insure proper operation at 90% relative humidity, good electrical practice should be followed. Insure the control is mounted so that total water immersion will not result. If such a condition occurs, unit should be cycled to the OFF position and inspected by a qualified service person before recycling.

Warning: Do not apply power to imput terminals unless electrode is properly connected and grounded or damage to the unit may result.

System Checks

Preliminary System Checks
It is desireable to checks the system after installation and before gas supply is turned on.

Be sure that the input is polarized as shown on wiring diagrams and the installation is electrically grounded. Cabinet, electrode and burner must have a common ground. Connect as shown in proper diagram in Figure 3, page 73.

Polarity Check

1. With voltmeter or indicator light, measure from Terminal A (L1) to ground. Voltage should be 120V.
2. Measured from L2 to ground. Voltage should be "0".
3. If 1 and 2 above are opposite, reverse input leads to insure correct polarity.

Initial Operation

1. Check installation, mounting and elec trode gap to insure conformance to specifications.

continued on page 74

OUTLINE DIMENSIONS

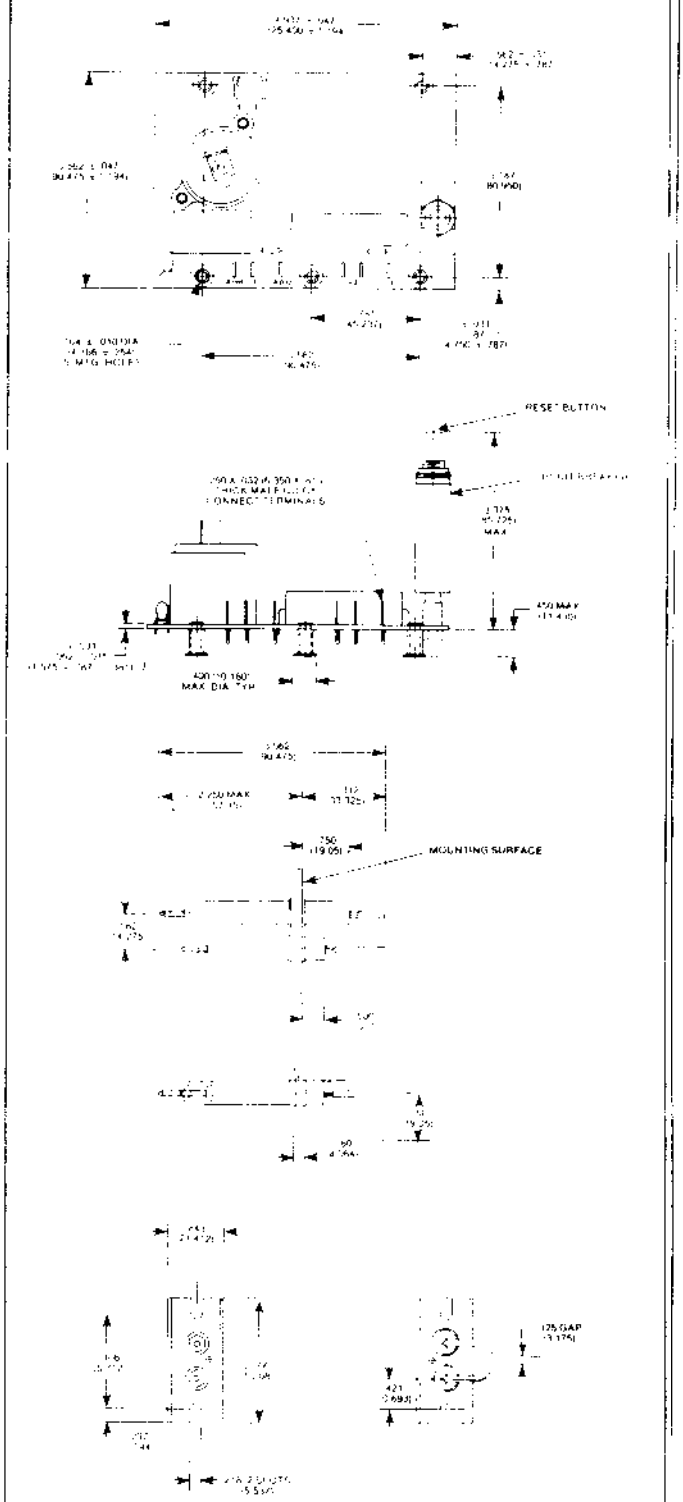

Figure 2

WIRING DIAGRAM

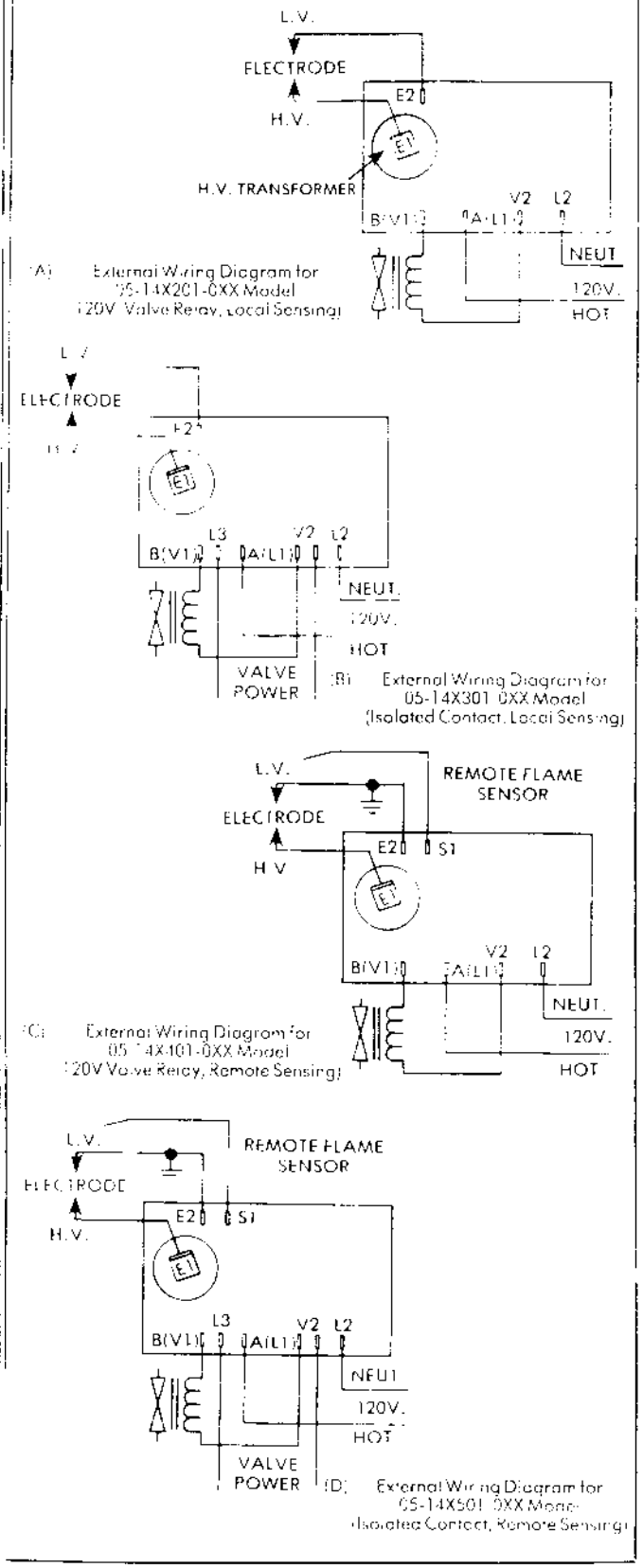

Figure 3

2. With the gas supply shut off, apply electrical power to the system by closing the control switch or by advancing the thermostat.

3. Check to insure that sparking occurs at the electrode tiops and across the 1/8" gap during the "trail-for-ignition" period specified for the unit. (See Specifications.)

4. 05-142 thermostate reset models will lock-out after the "trial-for-ignition" period and a few seconds later will trip the circuit breaker.

5. Manually open the gas supply line and either cycle the thermostat or depress the manual reset button to recycle the unit.

6. Check that ignition has been accomplished within "trial-for-ignition" period. Sparking will cease immediately after ignition.

7. If system ignites but fails to hold-in, check input voltage and polarity and check to assure that L2 line is grounded. If system ignites but drops-out and input voltage is correct, check level of flame current (5micro Amps minimum). check burner for proper ground.

Safety Checks

An annual imspection and test, conducted prior to the start of the heating season by qualified gas service personnel, is required to verify that the automatic gas ignition system, all associated components (i.e., fand limit switchs), and the appliance combustion chamber components operate according to the manufacturer's specifications. Components that have been physically damaged or that otherwise to perform their function according to specifications must be replaced immediately to avoid creating fire, explosive, and/or toxic hazards that can result inproperty damage, personal injury or even death. Test the control as follows:

1. Manually shut off the gas supply and apply power to the control board. After the "trial-for-ignition" period has elapsed, check that there is no voltage output between terminals B(V1) and V2, using a suitable voltmeter or neon tester.

2. Manually open the gas supply line and reactivate control unit. Sparking should occur and immediately cease when the flame is established. While running, manually close the gas supply. Sparking should promptly reappear when the flame is extinguished. The spark should remain on for the "trial-for-ignition" period and the lock-out. Check that there is no voltage output betweeen terminals B(V1) and V2 described in section 1 above.

NOTE: Recyle system before each test by cycling the thermostate or depressing the manual reset button.

Repair and Replacements

Warnings

1. The Fenwal 05-14 ignition system is not field repairable. Any alteration or modifi cation may result in fire, explosion, toxic hazards, proerty damage, personal injury or death. Consult you local Fenway Authorized Heating Wholesaler for replacement ignition system.
2. Use caution to avoid miswiring a replace ment controller. It is recommended to remove one wire at a time from the defective unit and reconnect it tot the corresponding terminal of the new con trol. Misconnection can result in condi tions hazardous to life and property.
3. The Fenwal 05-14 Direct Spark Ignition System is desinged for use only on new productrs by manufacturers of gas fired equipment. It may be used only as such, or as a replacement for an existing Fenwal Spark Ignition with the same catalog number. Any substitution or applications must be expressly approved by Fjenwal or the manufacturer of the equipemnt. Improper substitutions or aapplications may result in malfunction of equipemnt such as loss of flame sensing safety circuit creating an explosive atmosphere.

Limited Warranty Statement

Fenwal Incorporated represents that this product is free from defects in material and workmanship, and it will repaid or replace any product or part therof which proves to be defective in workmanship or material for a period of 18 monthls after delivery of the prodect to the buyer. For a full description fo Fenwal's Limited Warranty, which, amoung other things, limits the duration of the warranties of Merchantability and Fitness for a Particular Purpose and Excludes liability for Consequential Damages, please read the entire Limited Warranty on the Fenwal Quotation, Acceptance of Order and/or Original Invoice which will become a part of your sales agreement. Defective units should be returned to the factory, Ashland Massachusetts, shipment prepaid. Fenwal Incorporated will repaid or replace and ship repaid.

FENWAL INCORPORATED Division of Kidde Inc.

KIDDE

400 Main Street Ashland, Massachusetts 01721 (617) 881-2000

5.14.1 25M 11/86 Printed in U.S.A.

W.W. GRAINGER. INC. Distribution Group 5959 W. Howard St. Chicago, IL 60648

OBSERVE ALL SAFETY PRECAUTIONS DURING SERVICING. CONSULT OPERATING INSTRUCITONS AND PARTS MANUAL

Problem: My motor runs hot. When I touch it, it burns my hand. Is that normal?

Solution: Yes, a normall operating motor's surface temperature will be about 90°F (50°C surface rise) to 126°F (70°C surface rise) above room temperature. If the room temperature is 62°F, then the normal motor operating surface temperature will be betwwen 152°F to 188°F: this is hot enough to burn skin, but yet the motor is operating normally.

Twisto Says-

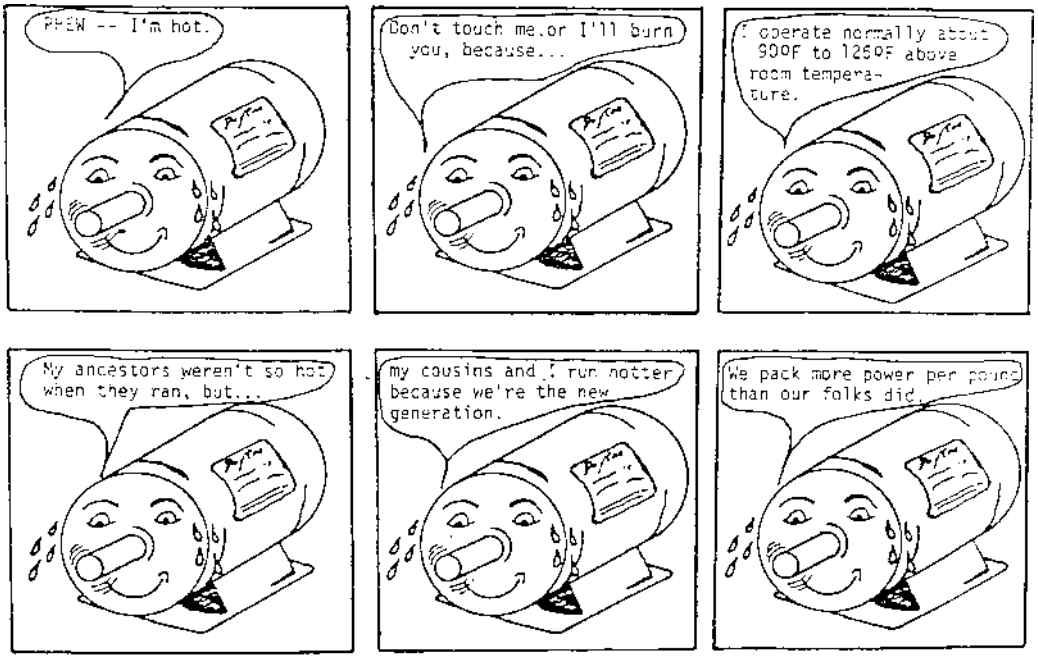

These instructions and diagrams have been checked for suitability. However, a successful solution depends upon individual accuracy, skill and caution. For this reason, W.W. Grainger, Inc. cannot guarantee the result of the procedure, or assume the responsibilisty for personal injury or property damage to persons using this procedure.

MOTOR CAPACITOR CHART

Fan And Heater

MOTOR	START CAPACITOR			RUN CAPACITOR		
	PART #	MFD	VOLT	PART #	MFD	VOLT
2.6HP VANE AXIAL BALDOR	FH-1884	216-240	230			
3.9HP VANE AXIAL BALDOR	FH-1884	216-240	230			
6.5HP VANE AXIAL BALDOR	FH-1884	216-240	230			
9.75HP VANE AXIAL BALDOR	FH-1884	216-240	230			
13HP VANE AXIAL BALDOR	FH-1884	216-240	230	FH-1885	20	370
1HP VANE AXIAL CENTURY	???	???	???			
2.6HP VANE AXIAL CENTURY	FH-1139	430-515	110			
3.9HP VANE AXIAL CENTURY	FH-1883	540-648	125			
6.5HP VANE AXIAL CENTURY	FH-1883	540-648	125			
9.75HP VANE AXIAL CENTURY	FH-1113	860-1032	125			
13HP VANE AXIAL CENTURY	FH-1113	860-1032	125	FH-1122	20	370
1HP VANE AXIAL BALDOR 1995-present				FH-7011	35	370
1.5HP VANE AXIAL BALDOR 1995-present				FH-7011	35	370
3HP VANE AXIAL BALDOR 1995-present				FH-7011	35	370
1HP VANE AXIAL BALDOR (pre 1995)	FH-7008	645	230			
1.5HP VANE AXIAL BALDOR (pre 1995)	FH-7008	645	230			
3HP VANE AXIAL BALDOR (pre 1995)	FH-7000	216	230	FH-7009	12	370
5-7HP VANE AXIAL BALDOR				FH-7010	25	370
7.5-10HP VANE AXIAL BALDOR				FH-7011	35	370
10-15HP VANE AXIAL BALDOR				FH-6448	60	370
1.5HP VANE AXIAL LEESON	???	???	???			
3HP VANE AXIAL LEESON	???	???	???			
5HP 1750RPM CENTRIFUGAL BALDOR	FH-7000	216	250	CH-6897	30	370
7.5HP 1750RPM CENTRIFUGAL BALDOR	FH-7000	216	250	CH-6897	30	370
10HP 1750RPM CENTRIFUGAL BALDOR	FH-7000	216	250	CH-6898	40	370
15HP 1750RPM CENTRIFUGAL BALDOR	FH-7000	216	250	CH-6899	50	370
15HP 1750RPM CENTRIFUGAL MARATHON	C-7455	180-220	330	CH-6898	40	370
3HP 3450RPM CENTRIFUGAL BALDOR	FH-7013	850	125			
5HP 3450RPM CENTRIFUGAL BALDOR	FH-7012	161	???	CH-6898	40	370
7.5HP 3450RPM CENTRIFUGAL BALDOR	FH-7000	216	230	CH-6898	40	370
10HP 3450RPM CENTRIFUGAL BALDOR	FH-7000	216	230	CH-6897	30	370
10-12HP 1750RPM VANE AXIAL BALDOR				CD-0184	40	370
10-12HP 1750RPM VANE AXIAL CENTURY				CD-0445	55	370
10-16HP 1750RPM VANE AXIAL BALDOR	TFH-2104	216	250	TFH-2105	60	370
1HP SPREADER BALDOR	FH-7000	216	250	FH-7001	20	370

a division of

THE GSI GROUP

1004 E. Illinois St.
Assumption, IL 62510
Phone 217-226-4421
Fax 217-226-4498

February 2000